To: Historic Preservation Commission

From: Dan Bruechert

Cultural Resource Planner III

Date: December 14, 2022

Re: 7203 Cedar Ave., HAWP #1011274

The applicant provided Staff with the following perspective of the proposed left-side dormer after completing the Staff Report. Staff recommended a rendering from this perspective in the Staff Report to allow the HPC to further evaluate the proposal. Staff has not conducted additional analysis or edited the Report based on this additional information.

Any additional questions can be directed to Staff at: dan.bruechert@montgomeryplanning.org.

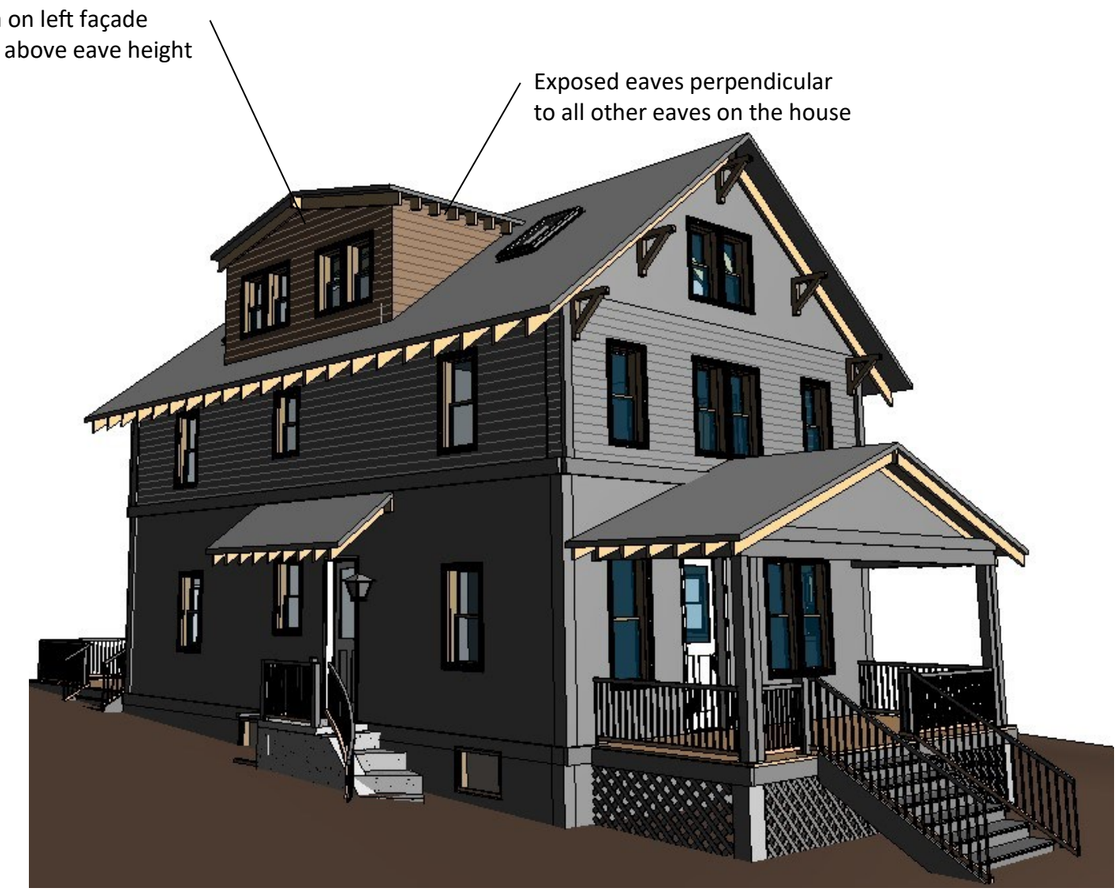

Note: Each isometric view is oriented to accentuate the disadvantages of its dormer style as passers-by will not view the house from a single fixed angle.

- Shed dormer is seen with more of a forward perspective, exposing its larger side walls
- Gable dormer is seen with more of a sideways perspective, exposing its larger end wall

7203 Cedar Ave

Right-of-Way Perspective

Shed vs. Gable Dormer

Additional roof area visible from side of house

Additional vertical façade area

7203 Cedar Ave

Left Side Elevation

Shed vs. Gable Dormer

Gabled Left Dormer **Shed Right Dormer**

Slightly more visibility from front perspective

Asymmetry apparent, though largely obscured by low perspective from right-of-way

7203 Cedar Ave

Front Elevation

Gabled Left Dormer with Shed Right Dormer

MONTGOMERY COUNTY HISTORIC PRESERVATION COMMISSION
STAFF REPORT

Address:	7203 Cedar Ave., Takoma Park	**Meeting Date:**	12/21/2022
Resource:	Contributing Resource **Takoma Park Historic District**	**Report Date:**	11/30/2022
Applicant:	Mark Foster	**Public Notice:**	11/23/2022
Review:	HAWP	**Staff:**	Dan Bruechert
Case No.:	1011274	**Tax Credit:**	Partial

Proposal: Roof alteration, dormer construction, fenestration alteration, window replacement, and after-the-fact front porch alteration.

STAFF RECOMMENDATION

Staff recommends the HPC **approve with four (4) conditions** the HAWP application:

1. The front porch stairs need to be finished with either masonry or wood, not a composite substitute. Final approval authority to ensure this condition has been satisfied is delegated to Staff.
2. Specifications for the first-floor rear windows and doors was not provided with the HAWP application. Staff recommends the HPC approve wood or aluminum clad windows and delegate final approval authority to Staff to confirm the condition has been satisfied.
3. Any modifications to the chimney need to be submitted to the HPC as a Staff Item/revision to the HAWP for consideration at a future HPC meeting.
4. The approval of this HAWP does not extend to the left-side shed dormer. Permit drawings may not include this dormer. An amended HAWP with a revised proposal can be submitted under this permit number.

ARCHITECTURAL DESCRIPTION

SIGNIFICANCE: Contributing Resource to the Takoma Park Historic District
STYLE: Craftsman
DATE: 1918

Figure 1: The subject property is located near the intersection of Cedar and Tulip Ave.

BACKGROUND

On August 18, 2022, the HPC held a Preliminary Consultation on the current proposal.[1] The HPC was generally supportive of several elements proposed including, raising the roof pitch, the left side gable dormer, the proposed skylights, the proposed side porch roof, alterations to the fenestration at the rear, and removing and replacing the existing windows.

Commissioners were uniform in finding that a shed dormer could be accommodated on the right roof slope, but that the one presented was too large.

The HPC also identified materials that would be required to fully evaluate the proposal as a HAWP. The applicant made revisions based on the HPC's feedback and provided the requested documentation.

PROPOSAL

The applicant proposes work in several areas including:

- After-the-fact replacement the front porch stairs;
- Installing a new roof over the left side entrance;
- Replacing the existing windows with window sash packs;
- Replacing the basement windows;
- Changing the rear fenestration;
- Raising the roof ridge;

[1] The Staff Report and Application for the Preliminary Consultaiont is available here: https://montgomeryplanning.org/wp-content/uploads/2022/08/II.D-7203-Cedar-Avenue-Takoma-Park.pdf. The recording of the hearing is available here: https://mncppc.granicus.com/MediaPlayer.php?publish_id=d894867c-1f09-11ed-b1ab-0050569183fa and discussion of this item begins at 4:19:00.

- Installing a shed dormer on the right roof slope; and
- Installing a gable dormer and skylights on the left roof slope.

APPLICABLE GUIDELINES

When reviewing applications for alterations and new construction within the Takoma Park Historic District, several documents are to be utilized as guidelines to assist the Commission in developing their decision. These documents include the historic preservation review guidelines in the approved and adopted amendment for the *Takoma Park Historic District (Guidelines)*, *Montgomery County Code Chapter 24A (Chapter 24A*), and *the Secretary of the Interior's Standards for Rehabilitation (Standards).*

Takoma Park Historic District Guidelines

There are two very general, broad planning and design concepts which apply to all categories. These are:

- The design review emphasis will be restricted to changes that are all visible from the public right-of-way, irrespective of landscaping or vegetation (it is expected that the majority of new additions will be reviewed for their impact on the overall district), and
- The importance of assuring that additions and other changes to existing structures act to reinforce and continue existing streetscape, landscape, and building patterns rather than to impair the character of the historic district.

Contributing Resources should receive a more lenient review than those structures that have been classified as Outstanding. This design review should emphasize the importance of the resource to the overall streetscape and its compatibility with existing patterns rather than focusing on a close scrutiny of architectural detailing. In general, however, changes to Contributing Resources should respect the predominant architectural style of the resource. As stated above, the design review emphasis will be restricted to changes that are *at all visible from the public right-of-way*, irrespective of landscaping or vegetation.

> All exterior alterations, including those to architectural features and details, should be generally consistent with the predominant architectural style and period of the resource and should preserve the predominant architectural features of the resource; exact replication of existing details and features is, however, not required,
>
> Minor alterations to areas that do not directly front on a public right-of-way such as vents, metal stovepipes, air conditioners, fences, skylights, etc. – should be allowed as a matter of course; alterations to areas that do not directly front on a public way-of-way which involve the replacement of or damaged to original ornamental or architectural features are discouraged, but may be considered and approved on a case-by-case basis,
>
> Major additions should, where feasible, be placed to the rear of existing structures so that they are less visible from the public right-of-way; additions and alterations to the first floor at the front of a structure are discouraged, but not automatically prohibited
>
> While additions should be compatible, they are not required to be replicative of earlier architectural styles
>
> Second story additions or expansions should be generally consistent with the predominant architectural style and period of the resource (although structures that have been historically single story can be expanded) and should be appropriate to the surrounding streetscape in terms of scale and massing

Original size and shape of window and door openings should be maintained, where feasible

Some non-original building materials may be acceptable on a case-by-case basis; artificial siding on areas visible to the public right-of-way is discouraged where such materials would replace or damage original building materials that are in good condition

Alterations to features that are not visible from the public right-of-way should be allowed as a matter of course

All changes and additions should respect existing environmental settings, landscaping, and patterns of open space.

Montgomery County Code; Chapter 24A-8

(1) The proposal will not substantially alter the exterior features of an historic site or historic resource within an historic district; or
(2) The proposal is compatible in character and nature with the historical, archeological, architectural or cultural features of the historic site or the historic district in which an historic resource is located and would not be detrimental thereto or to the achievement of the purposes of this chapter; or
(3) The proposal would enhance or aid in the protection, preservation and public or private utilization of the historic site or historic resource located within an historic district in a manner compatible with the historical, archeological, architectural or cultural value of the historic site or historic district in which an historic resource is located; or
(4) The proposal is necessary in order that unsafe conditions or health hazards be remedied; or
(5) The proposal is necessary in order that the owner of the subject property not be deprived of reasonable use of the property or suffer undue hardship; or
(6) In balancing the interests of the public in preserving the historic site or historic resource located within an historic district, with the interests of the public from the use and benefit of the alternative proposal, the general public welfare is better served by granting the permit.

(d) In the case of an application for work on an historic resource located within an historic district, the commission shall be lenient in its judgment of plans for structures of little historical or design significance or for plans involving new construction, unless such plans would seriously impair the historic or architectural value of surrounding historic resources or would impair the character of the historic district. (Ord. No. 9-4, § 1; Ord. No. 11-59.)

Secretary of the Interior's Standards for Rehabilitation

The Secretary of the Interior defines rehabilitation as "the act or process of making possible a compatible use for a property through repair, alterations, and additions while preserving those portions or features, which convey its historical, cultural, or architectural values." The applicable *Standards* are as follows:

2. The historic character of a property shall be retained and preserved. The removal of historic materials or alteration of features and spaces that characterize a property shall be avoided.

5. Distinctive materials, features, finishes and construction techniques or examples of craftsmanship that characterize a property will be preserved.

6. Deteriorated historic features will be repaired rather than replaced. Where the severity of deterioration requires replacement of a distinctive feature, the new feature will match the old in design,

color, texture, and, where possible, materials. Replacement of missing features will be substantiated by documentary and physical evidence.

9. New additions, exterior alterations, or related new construction shall not destroy historic materials that characterize the property. The new work shall be differentiated from the old and shall be compatible with the massing, size, scale, and architectural features to protect the historic integrity of the property and its environment.

10. New additions and adjacent or related new construction shall be undertaken in such a manner that if removed in the future, the essential form and integrity of the historic property and its environment would be unimpaired.

STAFF DISCUSSION

The subject property is a two-story Craftsman with a front gable roof, a full-width front porch, and roof brackets. The first floor of covered in stucco and the second floor is clapboard sided. The applicant proposes a whole house renovation/rehabilitation and work elements are detailed below.

After-the-fact Replacement of the Front Porch Stairs
The application states that the existing concrete front stairs have settled to the left and do not satisfy existing code requirements. The proposal will construct new composite stairs over the existing and support the new treads with wood blocking. The specific composite was not identified, however, based on Staff's observations, it appears to be Trex. A site visit confirmed that this work has already been completed. The HPC is to review this proposed work as if it has not already been completed.

The HPC generally finds that composite materials are inappropriate for front stairs and decks on Contributing and Outstanding resources in the Takoma Park Historic District. This is largely because they are too shiny to be a compatible substitute for wood and do not develop a patina over time. Staff concurs with the applicant's assessment that the existing concrete stairs are unsafe and need to be replaced. However, Staff finds that either wood or masonry are appropriate materials for replacement front porch stairs at the subject property. Staff recommends the HPC condition approval of the HAWP on porch stairs that are either wood or masonry. Final approval authority to ensure conformance with this condition can be delegated to Staff.

Figure 2: The subject property with another two-story Craftsman to the right.

Installing a New Roof Over the Left Side Entrance
Above the left side door is a ghost of a previously installed roof. The applicant states that rain can enter directly into the basement and proposes installing a roof over the door to shed rain away from the house. The proposal is to construct a shed roof with exposed rafter tails, to match the roof design, over the side porch.

The HPC was supportive of this proposal at the Preliminary Consultation and did not state a preference for a specific roof form. Staff finds the ghost in the stucco is evidence that there had been a shed roof over this entrance at some point in the building's history. Staff additionally finds that the proposed roof will not have a substantial impact on the house massing on the highly visible side elevation and recommends the HPC approve the shed porch roof.

Replacing the Existing Windows with Window Sash Packs
All the existing windows are wood one-over-one sash windows. The condition of the individual window sashes varies, but all sashes have peeling paint and have tested positive for lead (report attached). The applicant proposes removing all of the existing sashes and installing "low profile" aluminum clad sashes in their place. The proposed sash packs will have a one-over-one configuration to match the existing configuration. Additionally, the applicant proposes to remove all of the aluminum storm windows.

At the preliminary consultation, the HPC voiced their support for removing the existing windows provided the applicant could provide documentary evidence. That evidence has been submitted with the HAWP application and confirms the presence of lead paint and lead dust throughout. Based on the guidance provided by the HPC the removal of the existing window sashes could be permitted.

To effectively evaluate the proposed sash pack, the HPC requested measured drawings of the existing sash and the proposed sashes. The elevations show the stiles are ¼" wider than the existing, that the meeting rail is 7/8" wider than the existing, and that the bottom rail is ¼" taller than the existing. This is fairly typical of a sash pack assembly because the jamb liner shrinks the amount of glazing. While Staff encourages the applicant to restore the existing sashes and utilize the County Historic Preservation Tax Credit, Staff finds that the proposed sash pack is similar enough in dimensional profiles to the existing window dimensions to be compatible. Additionally, the HPC consistently determined – where replacement was acceptable – that aluminum clad windows are appropriate replacements to Contributing resources in the Takoma Park Historic District. Based on the feedback from the HPC at the Preliminary Consultation and the additional documentation presented, Staff recommends the HPC approve the window replacement under the *Design Guidelines*.

Replacing the Basement Windows
Most of the basement windows have been replaced or substantially altered. The applicant proposes to replace all of the basement windows with awning windows and the materials state one window opening will be enlarged to satisfy egress requirements.

Based on the photos submitted and HPC feedback, Staff finds replacing the basement windows is appropriate and will not detract from the historic character of the house and surrounding district. Staff supports replacing the existing basement windows with new aluminum clad windows in matching dimensions.

Changing the Rear Fenestration
At the rear of the house, the applicant proposes to remove the paired sash windows, non-historic half-lite door, and blocked-in window. In their place, the applicant proposes to install a pair of French doors on the right side of the rear elevation and a pair of sash windows on the left side of the rear elevation.

The Takoma Park *Design Guidelines* are quite permissive on alterations to elevations that are not visible from the public right-of-way. The *Guidelines* state alterations not visible from the public right-of-way should be approved as a matter of course. While a majority of the HPC supported this change, there was at least one dissenter who voiced support for retaining the fenestration as it is. Staff finds aluminum clad windows and doors should be approved at this elevation, however, a specification was not included in the application materials. Staff recommends the HPC delegate final approval authority to Staff to confirm that the new rear windows and doors are either wood or aluminum clad.

Raising the Roof Ridge
The applicant proposes raising the roof ridge by three feet and enlarging the window under the gable to accommodate a pair of sash windows on the front and rear elevations. The applicant provided additional information at the preliminary consultation that the roof rafters were under-engineered and the structure needed to be removed and replaced regardless of whether the HPC allowed the roof ridge to be raised. Based on this evidence, the HPC uniformly supported raising the roof ridge provided the decorative elements, including the siding, brackets, and exposed rafter tails were maintained. The HPC acknowledged the change in grade on the site would reduce the visual impact of the additional height and supported the alteration under the *Design Guidelines*.

The single fixed window under the gable will be replaced by a pair of aluminum-clad sash windows smaller than the ones on the first and second floors. The new sash windows will be consistent with the sash packs installed on the lower floors to match the profiles. Staff finds the new windows will not substantially alter the character of the house and recommended the HPC approve the new windows under the *Design Guidelines* and 24A-8(b)(1).

One item not addressed by the HAWP application is the code compliance of the existing chimney.

Acceptable chimney height is determined by the average roof height. Because the roof height is changing, not including the proposed dormers (discussed below), it stands to reason that the Department of Permitting Service would require a change to the chimney height. Staff recommends that the HPC approve the roof alteration, but add a condition that any change to the chimney needs to be presented to the HPC as a Staff Item/revision to the HAWP. Staff finds that a prescriptive condition is not appropriate in this instance as there are several potential solutions. Staff does not find it appropriate to delegate approval authority to Staff as allowed under the HPC's executive regulations that allow for Staff-level approval because there could be several design and material items that the HPC would wish to review.

Shed Dormer on the Right Roof Slope

On the right roof slope, the applicant proposes to install a shed dormer 16' (sixteen feet) wide with a roof projection of over one foot on each side. The dormer will have wood siding with a narrow reveal to match the second-floor siding on the existing house. The two pairs of sash windows will match the attic windows under the front and rear gables. The size of the proposed right-side dormer is reduced significantly from what was presented at the Preliminary Consultation.

Figure 3: StreetView image showing the right roof slope of the subject property.

As shown in Figure 3, this roof surface is visible from the intersection of Tulip and Cedar Ave., but only from a very narrow perspective. At the Preliminary Consultation, the HPC agreed with Staff's finding that a dormer could be accommodated on that roof slope, but it needed to be significantly reduced in size. Staff finds the proposed width is significantly reduced and is generally consistent with the guidance provided by the HPC and is set far enough to the rear that it will not have a significant impact on the streetscape. Staff additionally finds that the materials and architectural details are consistent with the house architecture as supported in the *Design Guidelines*.

On the left roof slope, the applicant proposes to construct a shed dormer matching the dimensions and appearance of the right-side dormer (Staff notes that this dormer is drawn incorrectly, as it is represented as projecting above the roof ridge). At the Preliminary Consultation submission, the applicant proposed a gable dormer on the left roof slope. The HPC supported this dormer in concept, but could not provide additional feedback because dimensions and materials were not included with the application.

Figure 4: The subject property from the left as photographed from the right-of-way.

Staff would prefer a gable dormer over the proposed shed dormer because it has a smaller apparent mass. The application states this element was changed to a shed dormer because accommodating the stair and landing would require a gable more than half the width of the roof plan. Regardless of why the proposal was changed, Staff does not find that the proposed shed dormer is an appropriate feature on the left side of the building. The proposed dormer, which aligns with the left wall plane, would add an additional 6' 1 7/16" (six feet, one and seven-sixteenths inch) to the vertical wall plane. Unlike the right elevation which has projections for the chimney and the bay in the dining room, the left elevation is a single, flat plane. Staff finds extending that plane will negatively impact the house's apparent mass and is too dramatic of a change to be supported under either the *Design Guidelines* or any of the provisions in 24A-8(b). While Staff is supportive of the rest of the proposed work, Staff recommends the approval of this HAWP not extend to the left side dormer. An amended HAWP for a different treatment can be submitted at a later date.

Skylights

On both the left and right roof slopes the applicant proposes to install a pair of skylights. One skylight will be installed in front of the proposed dormer and one to the rear.

While Staff generally disfavors skylights this far towards the front wall, in this instance Staff finds the visibility of the skylights will be significantly reduced by the rise in grade on the site and the roof height from the right-of-way. Because only the right front skylight will be visible from the right-of-way, Staff recommends the HPC approve the new skylights under the *Design Guidelines* and 24A-8(b)(1).

STAFF RECOMMENDATION

Staff recommends that the Commission **approve with four (4) conditions** the HAWP application;

1. The front porch stairs need to be finished with either masonry or wood, not a composite substitute. Final approval authority to ensure this condition has been satisfied is delegated to Staff.
2. Specifications for the first-floor rear windows and doors was not provided with the HAWP application. Staff recommends the HPC approve wood or aluminum clad windows and delegate final approval authority to Staff to confirm the condition has been satisfied.
3. Any modifications to the chimney need to be submitted to the HPC as a Staff Item/revision to the HAWP for consideration at a future HPC meeting.
4. The approval of this HAWP does not extend to the left-side shed dormer. Permit drawings may not include this dormer. An amended HAWP with a revised proposal can be submitted under this permit number;

under the Criteria for Issuance in Chapter 24A-8(b)(1), (2), and (d) and the *Takoma Park Design Guidelines*, having found that the proposal will not substantially alter the exterior features of the historic resource and is compatible in character with the district and the purposes of Chapter 24A;

and with the *Secretary of the Interior's Standards for Rehabilitation* #2, *9*, and *10*;

and with the general condition that the applicant shall present an electronic set of drawings, if applicable, to Historic Preservation Commission (HPC) staff for review and stamping prior to submission for the Montgomery County Department of Permitting Services (DPS) building permits;

and with the general condition that final project design details, not specifically delineated by the Commission, shall be approved by HPC staff or brought back to the Commission as a revised HAWP application at staff's discretion;

and with the general condition that the applicant shall notify the Historic Preservation Staff if they propose to make **any alterations** to the approved plans. Once the work is completed the applicant will contact the staff person assigned to this application at 301-563-3400 or dan.bruechert@montgomeryplanning.org to schedule a follow-up site visit.

For Staff only:
HAWP# 1011274
Date assigned_____

APPLICATION FOR HISTORIC AREA WORK PERMIT

HISTORIC PRESERVATION COMMISSION
301.563.3400

APPLICANT:

Name: Mark Foster E-mail: cedar@lilfos.com

Address: 7203 Cedar Ave City: Takoma Park Zip: 20912

Daytime Phone: 301-587-7050 Tax Account No.: _____

AGENT/CONTACT (if applicable):

Name: _____ E-mail: _____

Address: _____ City: _____ Zip: _____

Daytime Phone: _____ Contractor Registration No.: _____

LOCATION OF BUILDING/PREMISE: MIHP # of Historic Property_____

Is the Property Located within an Historic District? __Yes/District Name Takoma Park
__No/Individual Site Name_____

Is there an Historic Preservation/Land Trust/Environmental Easement on the Property? If YES, include a map of the easement, and documentation from the Easement Holder supporting this application.

Are other Planning and/or Hearing Examiner Approvals /Reviews Required as part of this Application? (Conditional Use, Variance, Record Plat, etc.?) If YES, include information on these reviews as supplemental information.

Building Number: 7203 Street: Cedar Ave

Town/City: Takoma Park Nearest Cross Street: Tulip Ave

Lot: 3 Block: 5 Subdivision: _____ Parcel: _____

TYPE OF WORK PROPOSED: See the checklist on Page 4 to verify that all supporting items for proposed work are submitted with this application. Incomplete Applications will not be accepted for review. Check all that apply:

- ☐ New Construction
- ☐ Addition
- ☐ Demolition
- ☐ Grading/Excavation
- ☐ Deck/Porch
- ☐ Fence
- ☐ Hardscape/Landscape
- ☑ Roof
- ☐ Shed/Garage/Accessory Structure
- ☐ Solar
- ☐ Tree removal/planting
- ☑ Window/Door
- ☑ Other: Front steps

I hereby certify that I have the authority to make the foregoing application, that the application is correct and accurate and that the construction will comply with plans reviewed and approved by all necessary agencies and hereby acknowledge and accept this to be a condition for the issuance of this permit.

_____ _____

Signature of owner or authorized agent Date

HAWP APPLICATION: MAILING ADDRESSES FOR NOTIFING [Owner, Owner's Agent, Adjacent and Confronting Property Owners]	
Owner's mailing address Yekaterina & Mark Foster 7203 Cedar Ave Takoma Park, MD 20912	**Owner's Agent's** mailing address
Adjacent and confronting Property Owners mailing addresses	
Gemma Flamberg & Dan Levin 7205 Cedar Ave Takoma Park, MD 20912	Steve Badt & Alice Weiss 7201 Cedar Ave Takoma Park, MD 20912
Nancy Augustine 7204 Cedar Ave Takoma Park, MD 20912	Andrew Penn & Cathy Surace 210 Tulip Ave Takoma Park, MD 20912

Description of Property: Please describe the building and surrounding environment. Include information on significant structures, landscape features, or other significant features of the property:

The 2-story, gable-roofed 1920 Craftsman with exposed eaves has a rectangular footprint with the short edge facing the right-of-way. It is elevated above the level of the sidewalk by 8-10'. A front porch, mostly demolished and rebuilt circa 1962, is slightly narrower than the house and also has a gable roof with exposed eaves. A prefabricated garage-like shed stands behind the house at the end of the shared driveway that runs immediately adjacent to the left side of the house. A concrete stoop is located on the left side of the house and a rear concrete stoop has been covered by a steel- and wood-framed deck. The main roof and front porch roof are asphalt shingled.

As reflected in archived newspaper classifieds, the house served as a multifamily or boarding house as early as 1925 and for many years afterward. The plainness of its finishes and features, as well as its undersized structural materials, suggest it was built on a low budget or as an investment property. Much of the Arts & Crafts character expected of a 1920 Craftsman is absent. Those details which appear original are simple and understated, though subjectively nicer than modern retail stock.

Description of Work Proposed: Please give an overview of the work to be undertaken:

The house will be repaired and modernized while retaining the original footprint, character, appearance, and in most cases, materials. Multiple hazards will be remediated, including its improper wiring, collapsed drain pipes, sagging support beams, chipped and abraded lead paint, failing stucco, non-compliant front steps, and water infiltration under the side stoop. Additional living space will be created in the unfinished attic, avoiding alteration of the footprint or the original stucco & clapboard siding.

Alterations visible from the right-of-way will include new porch steps, a replicated roof above the side stoop, removal of the aluminum storm windows, like-for-like replacement of most window sashes, replica windows where former windows were closed in, rearrangement of doors and windows on the rear-facing exterior elevation, enlargement of the front attic window, modification of the main roof pitch, new dormers on the main roof and skylights where visibility from the right-of-way is limited by the upward viewing angle.

Work Item 1: Front porch steps

Description of Current Condition:	Proposed Work:
The non-original concrete steps climbing from the yard level to the porch level are irregular in riser height and tread depth, and most fall outside code-required min and max dimensions. The seven step unit is constructed of parged concrete blocks, which have settled such that the steps are sloped to the left. The parging is failing in several areas.	Build new wood and composite steps over the existing concrete steps, following a common front step style found throughout the Historic District: dark treads with white risers and white wood railings. Wood stringers will be hung from the porch, adjacent to and enclosing the concrete steps. Further tread support will be provided by wood blocking affixed to the concrete steps. Treads will be a paint-free, wood-grained composite of recycled wood fibers and post-consumer plastic binders.

Work Item 2: Replicated side stoop roof

Description of Current Condition:	Proposed Work:
A concrete stoop and steps provide access to a first floor side entrance and stand above a basement-level side entrance. A roof sheltered the stoop in the past, but was removed sometime after 1969. During heavy rains, water runs off the stoop into the stairwell and rain also falls directly into the stairwell. Rainwater then infiltrates the basement through the door jambs and accumulates near a collapsed floor drain.	Replicate previous side roof to shelter side stoop and basement access stairs. Currently planned as a simple shed roof, but open to a gable roof of similar, scaled down proportions to the front porch. Open eaves with exposed rafters and wood support brackets will match those of other roof sections on the house. Roof material will be asphalt shingle on plywood sheathing.

Work Item 3: Window sash replacement

Description of Current Condition:	Proposed Work:
Windows on the first and second levels are 1-over-1, painted wood double-hungs with unfinished aluminum storms. Seemingly original exterior casings remain while most interior window trim is altered significantly. Small, side-hung windows are centered in the attic gables. Two of four basement windows have been replaced by vinyl windows, and two have been removed. Window construction varies slightly throughout, raising questions about originality. At least 16 sashes have modern glass. One original pane is broken. One in four has weatherstripping rabbets, and these windows appear to be in better condition than those without. All have altered stop molding. Most sashes are structurally sound with occasional missing chunks of wood and missing ropes. Jambs and sills are in generally good condition. Glazing putty is intact on most windows. No upper sash is operable, but inspection of weight pockets reveals that they are, in fact, double-hung. The latex paint on several lower sashes re-binds after closing, requiring leveraged force to open the window again, which further damages paint and sash hardware. XRF lead analysis revealed high lead levels in all tested window wells and jambs, and moderate or high levels in most tested sashes. All window components have several layers paint that is cracking, peeling, and/or interfering with operation. New paint as of March 2022 is flaking off and peeling due to a combination of failing substrates, abrasion, and thermal fluctuations.	Remove storm windows. Install low-profile metal-clad wood replacement windows or "sash packs" with jamb liners; leaving existing frames, jambs, wells, and exterior casing intact. If required, existing sashes can be stored for future re-installation. Wood-colored jamb and well linings will prevent further lead abrasion and thermal/moisture-driven deterioration. Altered and lead-positive interior casing to be replaced to replicate original casings and stop molding. New sash stile and rail dimensions will deviate from existing sash dimensions by 0" - 1/4" even when accounting for the jamb liner width. The meeting rail configuration will appear to be 1 1/8" thicker than the existing meeting rail due to an offset between top and bottom sashes. Three of four basement windows to be replaced with awning style windows. One to be enlarged per egress requirements and converted to casement style.

Work Item 4: Rear-facing door/windows

Description of Current Condition:

The rear elevation of the house includes four double-hung windows, one boarded-up window, one non-original entry door, and one small end-gable window.

Exterior casing is in fair condition with some sections replaced using non-matching materials

Proposed Work:

1. On the first level, the rear-facing door and windows will be replaced and rearranged. An operable picture window will roughly replace the door and boarded-up window. A pair of French doors will replace a pair of double-hung windows. The final size and product line of the picture window is pending the final kitchen layout, but will follow HPC material selection guidelines.

2. The attic-level gable end window will be replaced by a pair of double-hung windows of the same product line as those used in Work Item 3, but delivered in a new-construction frame. Any impacted clapboard siding will be retained for use in repairs and patches elsewhere.

Work Item 5: Modified main roof pitch

Description of Current Condition:

The existing gable roof features exposed-rafter eaves, ca. 2003 asphalt shingles, one modern gutter, and one older, half-round gutter. The pitch is a 6/12, or 27°

The roof assembly consists of sheathing that is a mix of 1x4, 1x6, and 1x8 pine in fair-to-good condition on 2x6 rafters meeting at at non-structural ridge board with 2x4 collar ties. The original beadboard decking visible in the exposed eaves has been replaced by standard 1x6 boards in more than 50% of the eaves.

The ridge board is 6' from the floor and the collar ties are ~6" lower, preventing the ceiling height required for inhabited space. One half of the attic floor is uninsulated and the existing rafters are not thick enough to hold the code-required R-49 roof insulation.

Proposed Work:

1. Re-frame roof with an ~9/12 pitch replicating that of several nearby gable-roofed Craftsman houses such that the new ridge board height allows for code complaint ceiling heights. Where the pitch change impacts clapboards on the front elevation, gaps will be filled with salvaged clapboards from the rear gable end.

Rafters will be upgraded to 2x10s to allow for R-38 insulation in the voids combined with 2" R-12 rigid foam panels placed between the rafters and roof sheathing. New roof to be topped with asphalt shingles or other period-appropriate material.

This additional, code-compliant living space will remain within the original building footprint and avoid the creation of an equivalently-sized, two-story rear addition with a footprint of ~20'x15'. A rear addition would destroy many square feet of original clapboard and stucco materials while significantly altering the massing and proportions of the house as seen from Tulip Ave.

2. Install solid wood bead board in all exposed eaves.
3. Re-use old rafters to reinforce ("sister") existing, undersized attic floor joists.
4. Replace front gable end window with dual double-hung windows in similar style to nearby Craftsman houses. Windows to match those in Work Items 3 and 4.

Work Item 6: Dormers and skylights

Description of Current Condition:

Due to the house's orientation and elevation above the street, the existing, asphalt- shingled roof is not visible from most places within the right-of-way until the observer moves up Cedar Ave to higher ground. The right side of the roof is especially obscured due to the slope of the hill on which the house is situated, as well as the proximity of 7201 Cedar Ave.
The house features an original set of fixed stairs to the attic; however, the sloped roof encroaches on the code-required headroom of the stairs.

Proposed Work:

1. Add a shed dormer to the left side of the roof above the fixed stairs, and matching dormer to the right side of the roof to meet the ceiling height requirement for occupied living space.

While a gabled dormer was intended for the left-side roof, accommodating the stair and landing headroom requirement would result in a gable that is more than half the width of the main roof. A shed dormer can accomplish the goal in a more compact form.

Dormers to be sided with salvaged or replicated clapboard. Both dormers to have exposed eaves. All dormer windows to be located on side-facing elevations. Windows will include pairs of double-hung models matching those in Work Items 3 and 4.

2. Install pairs of surface-mounted skylights on both sides of the dormers to bring daylight into the new living spaces. Due to the viewing angle, the skylights will be difficult to see from the right-of-way immediately around the subject property.

HISTORIC AREA WORK PERMIT
CHECKLIST OF
APPLICATION REQUIREMENTS

	Required Attachments						
Proposed Work	I. Written Description	2. Site Plan	3. Plans/ Elevations	4. Material Specifications	5. Photographs	6. Tree Survey	7. Property Owner Addresses
New Construction	*	*	*	*	*	*	*
Additions/ Alterations	*	*	*	*	*	*	*
Demolition	*	*	*		*		*
Deck/Porch	*	*	*	*	*	*	*
Fence/Wall	*	*	*	*	*	*	*
Driveway/ Parking Area	*	*		*	*	*	*
Grading/Exc avation/Land scaing	*	*		*	*	*	*
Tree Removal	*	*		*	*	*	*
Siding/ Roof Changes	*	*	*	*	*		*
Window/ Door Changes	*	*	*	*	*		*
Masonry Repair/ Repoint	*	*	*	*	*		*
Signs	*	*	*	*	*		*

3 Side Elevation
1/4" = 1'-0"

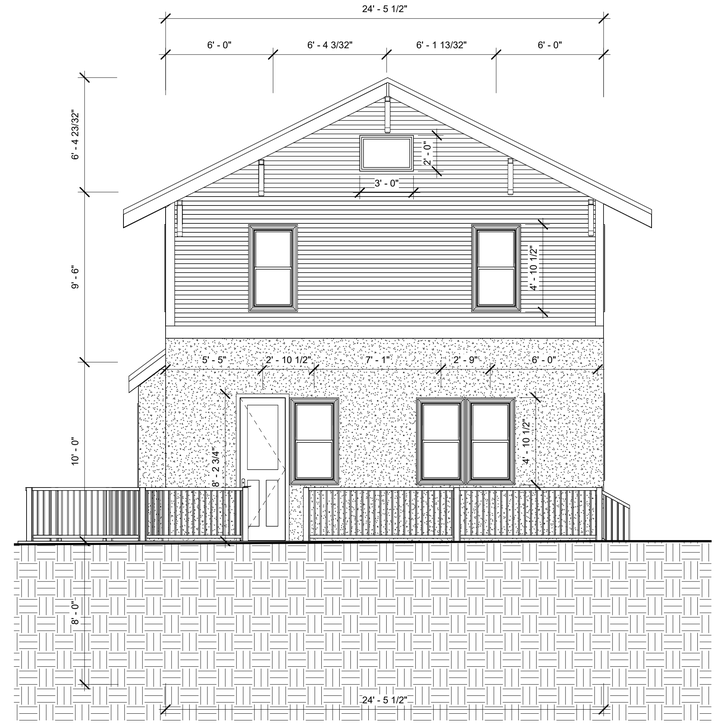

4 Rear Elevation
1/4" = 1'-0"

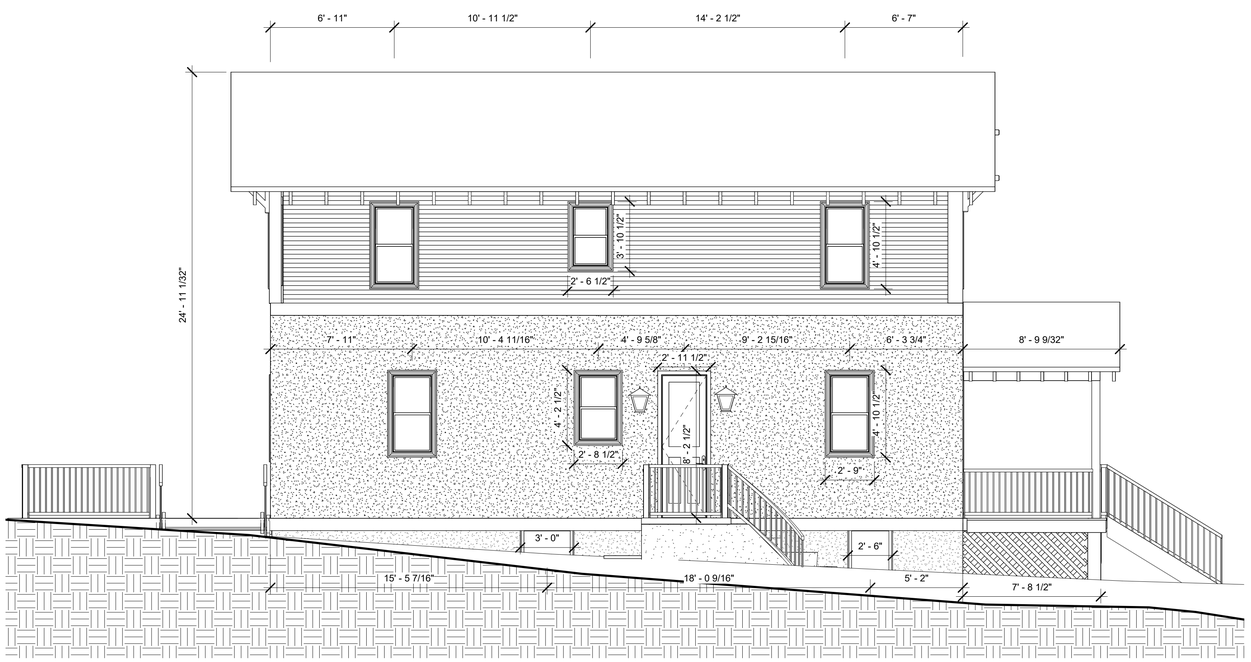

2 Drive Elevation
1/4" = 1'-0"

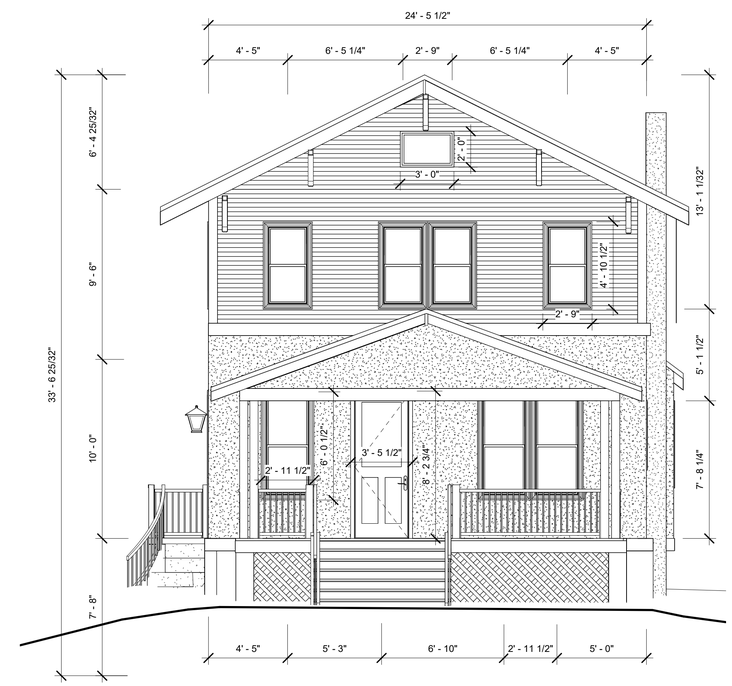

1 Front Elevation
1/4" = 1'-0"

DAWN HERSHBERGER
DESIGN
410-905-2832

RENOVATION OF RESIDENCE OF

KATYA & MARK FOSTER
7203 CEDAR LANE
TAKOMA PARK, MD 20912

AS BUILT

AB001

Scale: 1/4" = 1'-0"

Date: 07/10/22

24 x 36

NOTE: ONLY NEW/MODIFIED ELEMENTS ARE ANNOTATED IN THIS SET OF DRAWINGS

3 Side Elevation
1/4" = 1'-0"

4 Rear Elevation
1/4" = 1'-0"

2 Drive Elevation
1/4" = 1'-0"

1 Front Elevation
1/4" = 1'-0"

DAWN HERSHBERGER
DESIGN
410-905-2832

RENOVATION OF RESIDENCE OF

KATYA & MARK FOSTER
7203 CEDAR LANE
TAKOMA PARK, MD 20912

PROPOSED

A001

Scale: 1/4" = 1'-0"

Date: 07/10/22

24 x 36

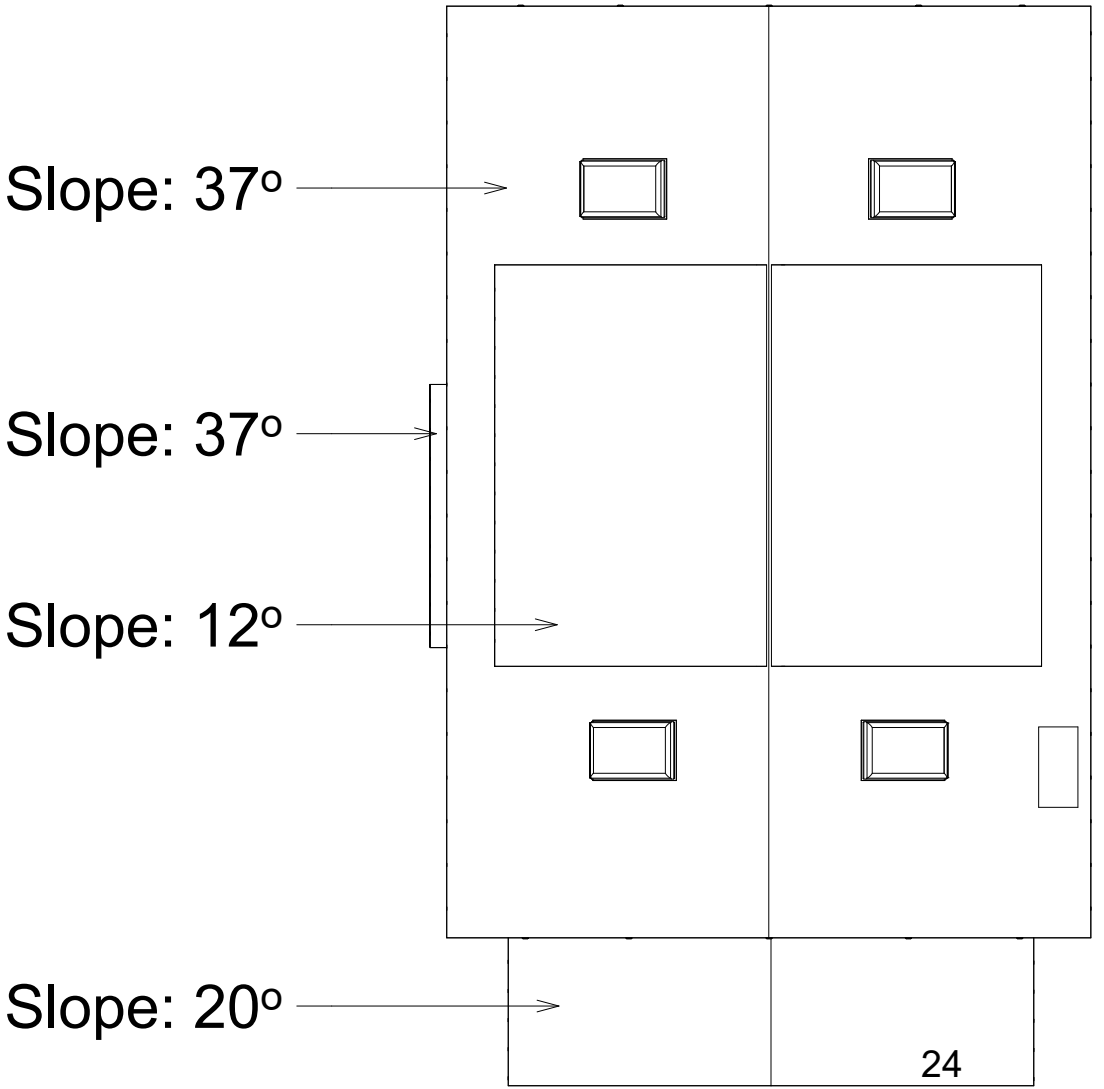
Slope: 37º
Slope: 37º
Slope: 12º
Slope: 20º
24

Orthogonal view from ~10’ above right-of-way

7203 Cedar Ave

Front Elevation Rendering

Proposed

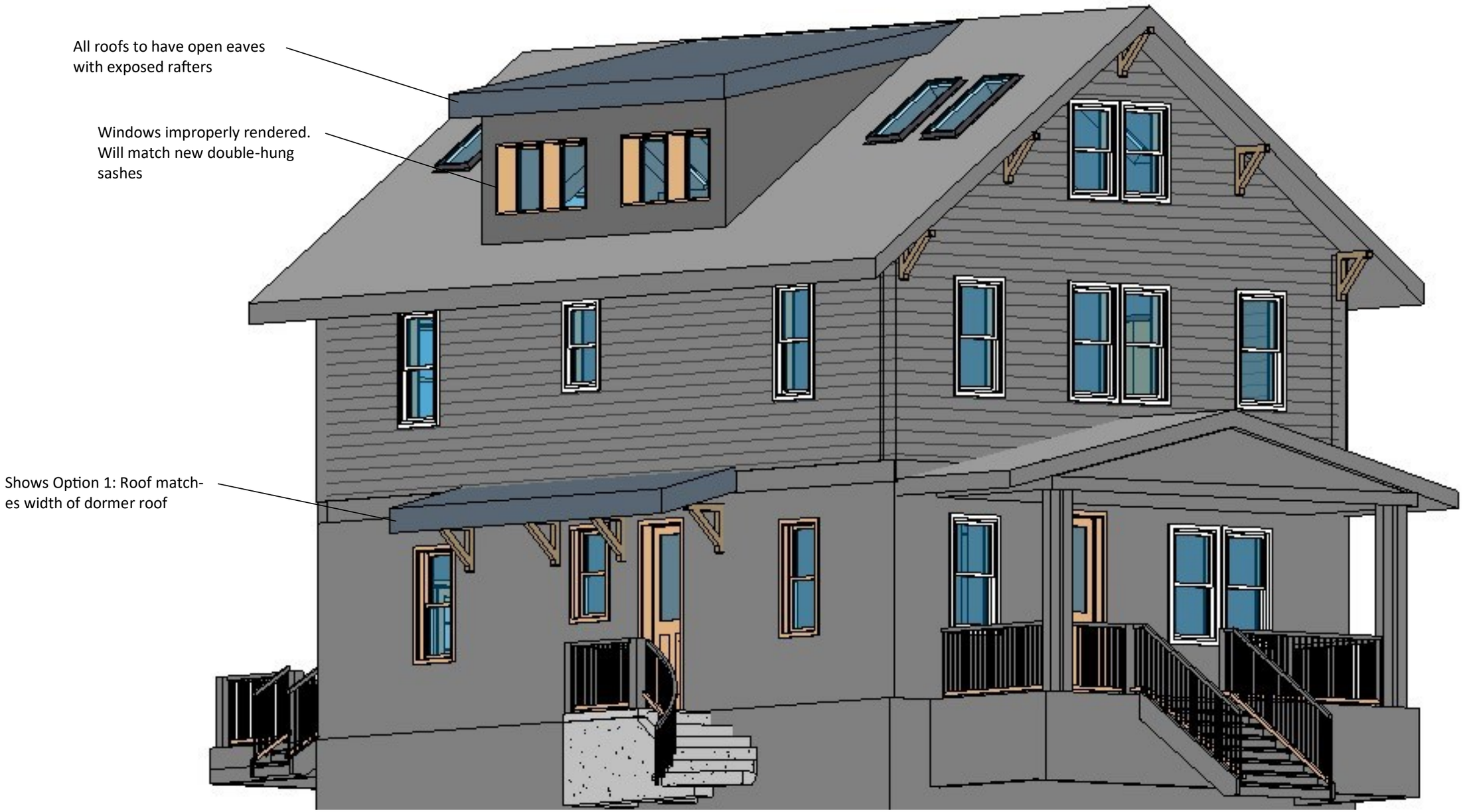

7203 Cedar Ave

Front-left Orthogonal

Proposed

Work Item 1: Front porch steps

The following photos show the existing, non-compliant front porch steps

Work Item 1: Front porch steps, con't

The following are examples of porch steps found within a 1-block radius of the subject property. The proposed steps will approximate such designs.

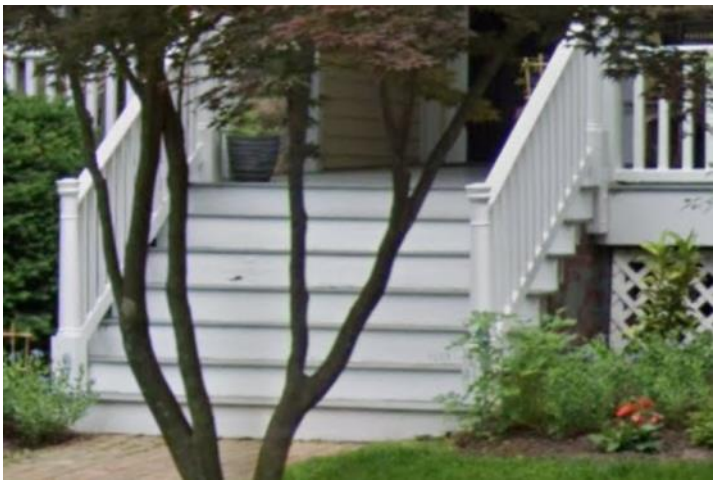

Work Item 2: Restored side stoop roof

Below are a photo of the existing left-side elevation to be compared to that in the proposed elevation drawing set.

Work Item 3: Window sash replacement

The following pages include photos of existing windows for reference and manufacturer specifications of the proposed replacement sashes.

Typical windows with various non-original casings

Work Item 3: Window sash replacement, con't

Window condition All windows last painted in Q1 2022

Work Item 3: Window sash replacement, con't

Existing sash dimensions

Left/right stiles: 2 3/8" + ~1/8" lateral travel space on each side

Top rail: 2 1/8"

Bottom rail: 2 3/4" at interior edge of sloped sill

Meeting rail: 1 1/4"

Work Item 3: Window sash replacement, con't

Existing vs. Proposed Sash Elevations: Meeting rail appears taller due to offset of top and bottom sash rails, as shown on the next page.

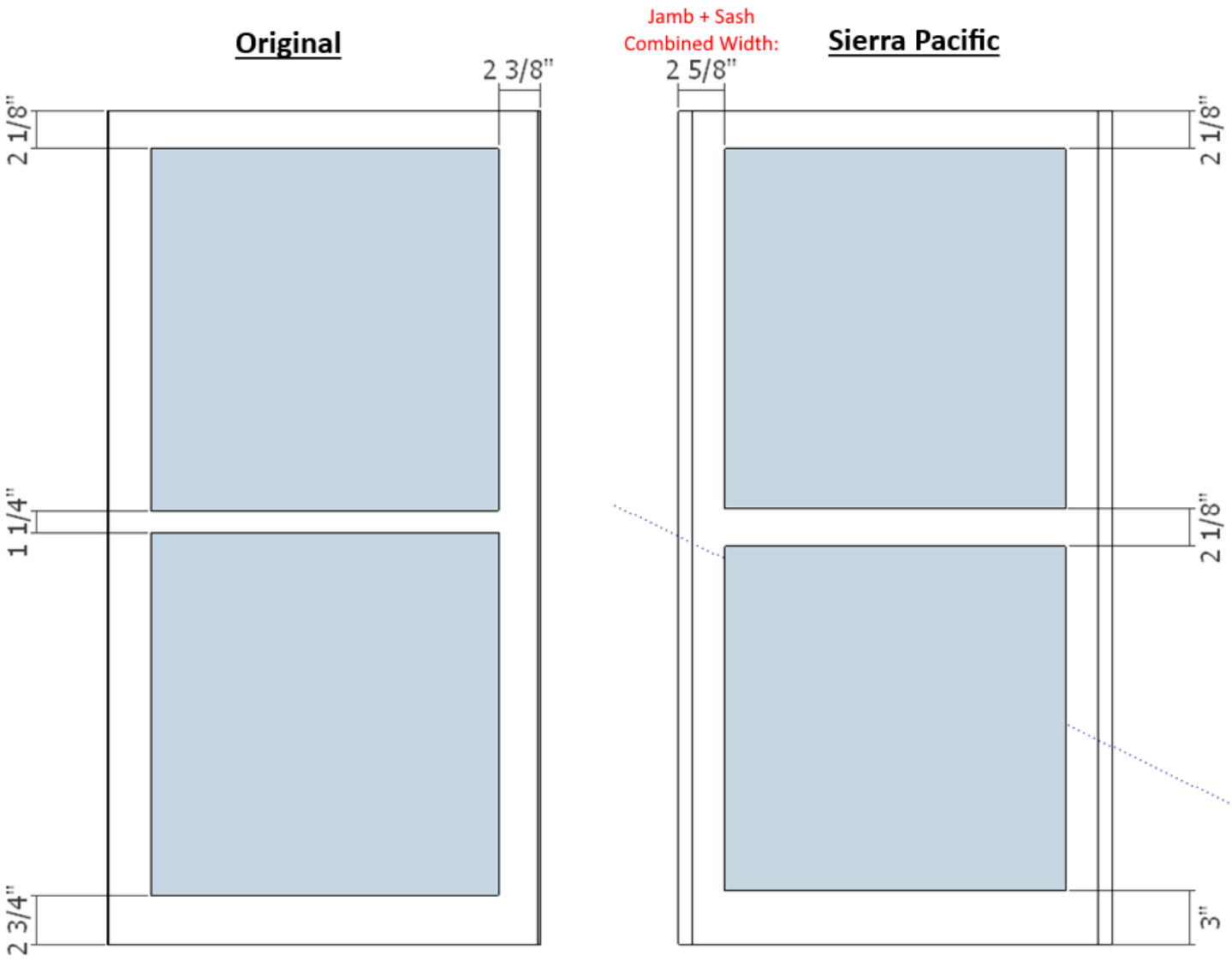

Interior rail height is shorter due to sill slope.
Existing sashes are not cut to match sill slope.

Work Item 3: Window sash replacement, con't

Proposed sash dimensions: vertical and horizontal sections

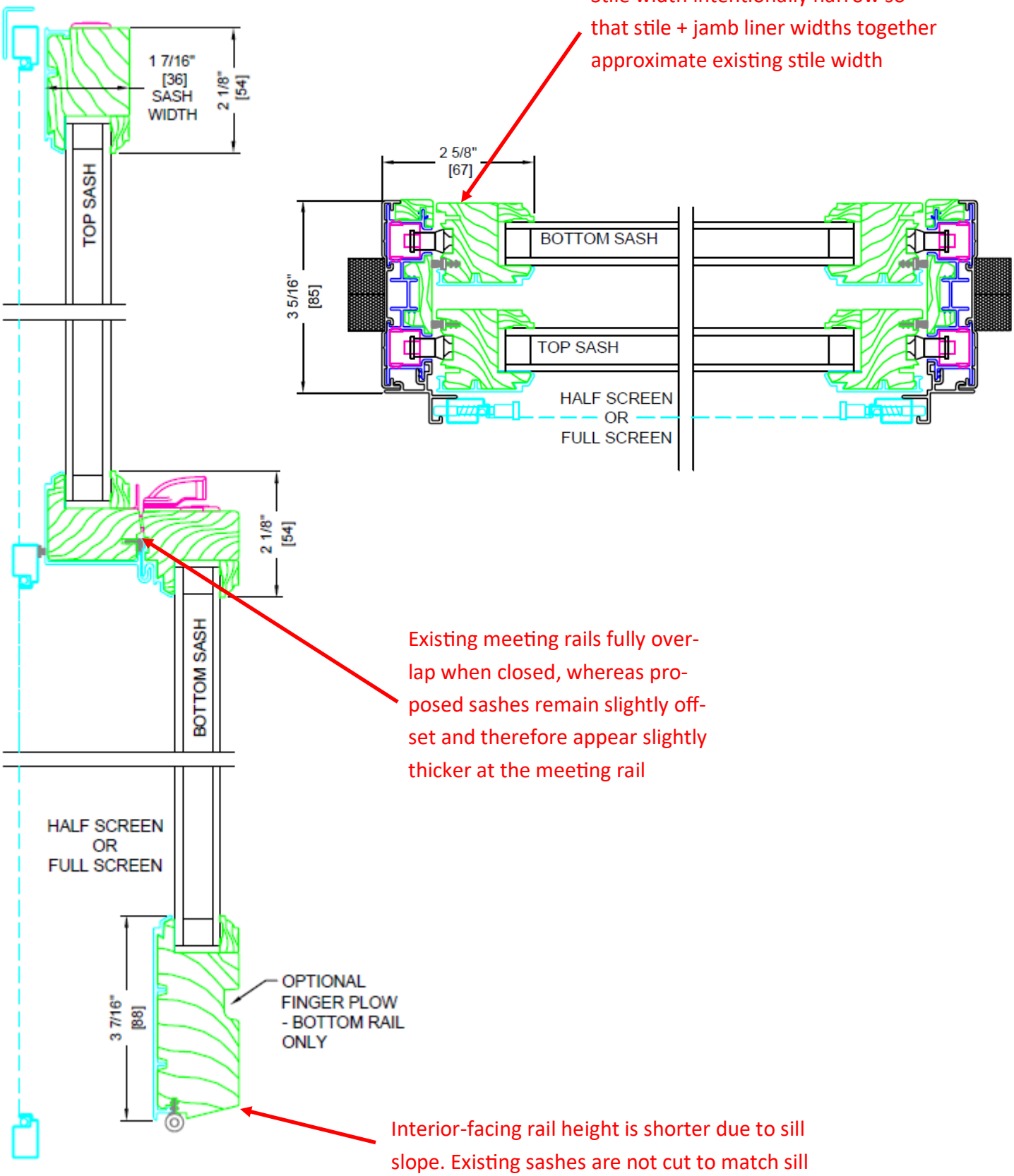

Work Item 3: Window sash replacement, con't

Below are photos of an example sash pack kit and similar replacement sashes in situ

Work Item 3: Window sash replacement, con't

Existing basement windows

Work Item 4: Rear-facing doors/windows

Below is a photo of the existing rear fenestration to be compared to that in the proposed elevation drawing set.

Work Item 5: Modified roof pitch

Below is a photo of the existing front elevation to be compared to that in the proposed elevation drawing set.

Work Item 5: Modified roof pitch, con't

The following are examples of 2-story Craftsman houses with steeper roof pitches found within a 1-block radius of the subject property, including the next-door neighbor in the middle photo.

Work Item 6: Dormers and skylights

Below are photos of the existing side elevations to be compared to those in the proposed elevation drawing set. The right side elevation is impossible to photograph directly, so it is shown as completely as feasible.

Work Item 6: Dormers and skylights, con't

The following are examples of 2-story Craftsman houses with dormers within 1-block radius of the subject property, including the next-door neighbor.

7201 Cedar Ave

212 Tulip Ave showing one of two dormers

Photo taken from subject property of shed dormer at 210 Tulip Ave in foreground and gable dormer 214 Tulip Ave beyond

AMA Analytical Services, Inc.
Focused On Results.

CERTIFICATE OF ANALYSIS

Chain of Custody:	637881	**Job Name:**	7203 Cedes Avenue	**Date Submitted:**	07/18/2022
Client:	Lead Inspection Services	**Job Location:**	Not Provided	**Date Analyzed:**	07/19/2022
Address:	1407 Fernhill Court District Heights, MD 20747	**Job Number:**	Not Provided	**Report Date:**	07/19/2022
		P.O. Number:	Not Provided	**Date Sampled:**	07/14/2022
Attention:	Ron Childs			**Person Submitting:**	Ron Childs

Summary of Atomic Absorption Analysis for Lead

AMA Sample Number	Client Sample Number	Analysis Type	Sample Type	Area Wiped (ft^2)	Reporting Limit	Total ug	Final Result	Comments
637881-1	7203-01 LIV/DIN WS Windowsill	Flame AA	Wipe	0.6875	15 ug/sqft	1330	1900 ug/sqft	
637881-2	7203-02 LIV/DIN FL	Flame AA	Wipe	2.0	5 ug/sqft	32.1	16 ug/sqft	
637881-3	7203-03 BR2 WS Windowsill	Flame AA	Wipe	0.5625	18 ug/sqft	71.3	130 ug/sqft	
637881-4	7203-04 BR5 WS Windowsill	Flame AA	Wipe	0.5625	18 ug/sqft	3220	5700 ug/sqft	
637881-5	7203-05 BASE PLAY RM FL	Flame AA	Wipe	2.0	5 ug/sqft	273	140 ug/sqft	
637881-6	7203-06 BLANK	Flame AA	Wipe	0.0	10 ug	<10.0	<10 ug	

Analysis Method for Flame: Air, Wipes, Paints, and Soil/Solids: EPA 600/R-93/200(M)-7000B; Water: SM-3111B Analysis Method For Furnace: Air, Wipes, Paints, and Soil/Solids : EPA 600/R-93/200(M)-7010; Water: SM-3113B N/A = Not Applicable mg/Kg = parts per million (ppm) on a dry weight basis mg/L = parts per million (ppm) %Pb = percent lead on a dry weight basis ug = micrograms ug/L = parts per billion (ppb)
Note: All samples were received in good condition unless otherwise noted.
Note: All results have two significant digits. Any additional digits shown should not be considered when interpreting the result.

Analyst(s): George Land

See QC Summary for analytical results of quality control samples associated with these samples.

Air and Wipe results are not corrected for any blank results. Final results for air and wipe samples are based on client supplied information not verified by this laboratory.

All results are to be considered preliminary and subject to change unless signed by the Technical Director or Deputy.

Technical Director Jean-Paul Littleton

4475 Forbes Blvd. · Lanham, MD, 20706 · (301) 459-2640 · Toll Free (800) 346-0961 · Fax (301) 459-2643

AMA Analytical Services, Inc.
Focused On Results.

QC Summary for SDG #72551

Overview

Analysis Type: Flame AA
Sample Type: Wipe
Analysis Date: 07/19/2022

Samples Included

637881-1 637881-2 637881-3 637881-4 637881-5 637881-6

Preparation Blank ✔

Result: -0.034 ppm

Report Limit Vertification Sample

Percent Recovery: %

Duplicates

RPD: N/A

Matrix Spike Analysis

Spiked Sample Percent Recovery: N/A
Spike Duplicate Percent Recovery: N/A
RPD: N/A

Matrix Blank ✔

Result: 0.018 ppm

Laboratory Control Sample #1 ✔

Percent Recovery: 95.0%

Laboratory Control Sample #2 ✔

Percent Recovery: 95.90%

Reference Sample

Percent Recovery: N/A

Calibration Curve ✔

Correlation: 0.999784

Serial Dilution / Bench Spike

Serial Dilution RPD: N/A
Bench Spike Percent Recovery: N/A

Notes

The Report Limit Verification Sample prepared with this sample group was not spiked. A passing Report Limit Verification Sample for wipe samples for this analysis date can be found with SDG 72553 (109.3% recovery).

4475 Forbes Blvd. · Lanham, MD, 20706 · (301) 459-2640 · Toll Free (800) 346-0961 · Fax (301) 459-2643

AMA Analytical Services, Inc.
Focused On Results.
AIHA (#100470) NVLAP (#101143-0) NY ELAP (10920)
4475 Forbes Blvd. • Lanham, MD 20706
(301) 459-2640 • (800) 346-0961 • Fax (301) 459-2643
www.amalab.com

(COC # Assigned upon arrival at lab.) #637881

LEAD CHAIN OF CUSTODY

Mailing/Billing Information:
Client Name: Lead Inspection Services
Address: 1407 Fernhill Ct
Address: District Heights, MD 20747
Address:
Phone #: 202-438-3586 Fax #:

Submittal Information:
Job Name: 7203 Cedar Ave
Job Location:
Job #: P.O. #:
Point of Contact: Phone #:
Submitted by: Signature:

Reporting Info (Results provided as soon as technically feasible). If no TAT/Reporting Info is provided, AMA will assign defaults of 5-Day & email/fax to contacts of file.

TURN AROUND TIME (TAT):			REPORT TO:
After Hours (must be pre-scheduled)	**Normal Business Hours**		☐ Include COC/Field Data Sheets with Report
☐ Immediate Date Due:	☐ Immediate	☐ 3-Day ☐ Results Required by Noon	☐ Email:
☐ 24 Hours Time:	☑ Next Day	☐ 5-Day +	☐ Fax:
Comments:	☐ 2-Day	Due Date: 7/19/22	☐ Verbals

Sample Type

☐ Paint Chip____(QTY) ☐ Air____(QTY) ☐ Soil/Solid____(QTY) ☐ Dust Wipe (wipe type 6)____(QTY)
☐ TCLP____(QTY) ☐ Drinking Water____(QTY) ☐ Waste Water____(QTY) ☐ Furnace (Media type____)____(QTY)

*If field data sheets are submitted, there is no need to complete bottom section ☑ All samples received in good condition unless otherwise noted.

Sample Information					Analysis Matrix				Client Contact (Laboratory Staff Only)
Sample Number	Sample Collection Location/Surface	Date/Time	Volume (L)	Wipe Area	Air	Paint Chip or Soil/Solid	Dust	Water & Other	
7203-01	Liv/Din Rm sill wall C	7/14		33x3			x		Date/Time: Contact: By:
7203-02	Liv/Din Rm floor			12x24			x		
7203-03	Bed 2 sill wall B			27x3			x		
7203-04	Bed 5 sill wall A			27x3			x		
7203-05	Basement Play room			12x24			x		Date/Time: Contact: By:
	floor						x		
7203-06	Blank						x		
							x		
							x		Date/Time: Contact: By:
							x		
							x		
							x		

LABORATORY STAFF ONLY: (CUSTODY)
1. Date/Time RCVD: 7 / 18 / 22 @ 0600 Via: DO By (print): Sign:
2. Date/Time Analyzed: / / @ By (print): Sign:
3. Results/Reported To: Via: Date: / / Time: Initials:
4. Comments:

Lead Paint Inspection Report

Ronald Childs
MDE Lic. # 17573
1407 Fernhill Court
District Heights, MD 20747

INSPECTION SITE:	Mark Foster 7203 Cedar Ave Takoma Park, MD 20912 Year Built: 1918
INSPECTION DATE:	7/14/2022 - 7/14/2022
INSTRUMENT TYPE:	Viken Detection Pb200i XRF Lead Paint Analyzer 2215
ACTION LEVEL:	0.7 (mg/cm²)
Job ID:	7203
STATEMENT:	The inspection verified the presence of lead based paint on interior and exterior components. The calibration readings are to ensure the device is working properly.

Compare this value to test results on following pages

Lead Paint Inspection Report

Inspection Date: 7/14/2022 - 7/14/2022
Action Level: 0.7 (mg/cm²)
Total Readings: 135
Unit Started: 07/14/2022 15:10:57
Unit Ended: 07/14/2022 16:52:46

Inspection Site: Mark Foster
7203 Cedar Ave
Takoma Park, MD 20912
Year Built: 1918

Read #	Result	COMPONENT	SUBSTRATE	SIDE	CONDITION	COLOR	ROOM TYPE	FLOOR	OTHER	MISC.	Lead (mg/cm²)	Mode
1 (CAL)				CALI							1.0 mg/cm²	Action Level
2 (CAL)				CALI							1.0 mg/cm²	Action Level
3 (CAL)				CALI							1.0 mg/cm²	Action Level
4 (CAL)				CALI							0.0 mg/cm²	Action Level
5 (CAL)				CALI							0.0 mg/cm²	Action Level
6 (CAL)				CALI							0.0 mg/cm²	Action Level
7	NEG	WALL	DRYWALL	A	GOOD	WHITE	LIVE ROOM	FIRST			0.2 mg/cm²	Action Level
8	NEG	WALL	DRYWALL	B	GOOD	WHITE	LIVE ROOM	FIRST			0.0 mg/cm²	Action Level
9	NEG	WALL	DRYWALL	C	GOOD	WHITE	LIVE ROOM	FIRST			0.1 mg/cm²	Action Level
10	NEG	WALL	DRYWALL	D	GOOD	WHITE	LIVE ROOM	FIRST			0.1 mg/cm²	Action Level
11	POS	BASEBOARD	WOOD	D	GOOD	WHITE	LIVE ROOM	FIRST			0.7 mg/cm²	Action Level
12	POS	WINDOW SILL	WOOD	A	GOOD	WHITE	LIVE ROOM	FIRST			1.0 mg/cm²	Action Level
13	NEG	WINDOW CASE	WOOD	A	GOOD	WHITE	LIVE ROOM	FIRST			0.0 mg/cm²	Action Level
14	POS	WINDOW SASH	WOOD	A	GOOD	WHITE	LIVE ROOM	FIRST			1.2 mg/cm²	Action Level
15	NEG	DOOR CASE	WOOD	A	GOOD	WHITE	LIVE ROOM	FIRST			0.0 mg/cm²	Action Level
16	NEG	DOOR JAMB	WOOD	A	GOOD	WHITE	LIVE ROOM	FIRST			0.0 mg/cm²	Action Level
17	NEG	WALL	WOOD	A	GOOD	WHITE	DEN	FIRST			0.4 mg/cm²	Action Level
18	NEG	WALL	WOOD	B	GOOD	WHITE	DEN	FIRST			0.4 mg/cm²	Action Level

Lead Paint Inspection Report

Inspection Date: 7/14/2022 - 7/14/2022
Action Level: 0.7 (mg/cm²)
Total Readings: 135
Unit Started: 07/14/2022 15:10:57
Unit Ended: 07/14/2022 16:52:46

Inspection Site: Mark Foster
7203 Cedar Ave
Takoma Park, MD 20912
Year Built: 1918

Read #	Result	COMPONENT	SUBSTRATE	SIDE	CONDITION	COLOR	ROOM TYPE	FLOOR	OTHER	MISC.	Lead (mg/cm²)	Mode
19	NEG	WALL	WOOD	D	GOOD	WHITE	DEN	FIRST			0.5 mg/cm²	Action Level
20	NEG	WALL	WOOD	C	GOOD	WHITE	DEN	FIRST			0.5 mg/cm²	Action Level
21	NEG	WALL	WOOD	A	GOOD	WHITE	DEN	FIRST			0.4 mg/cm²	Action Level
22	NEG	WINDOW SILL	WOOD	A	GOOD	WHITE	DEN	FIRST			0.1 mg/cm²	Action Level
23	POS	WINDOW SASH	WOOD	A	GOOD	WHITE	DEN	FIRST			1.2 mg/cm²	Action Level
24	NEG	WINDOW CASE	WOOD	A	GOOD	WHITE	DEN	FIRST			0.2 mg/cm²	Action Level
25	POS	WINDOW SILL	WOOD	D	GOOD	WHITE	DEN	FIRST			2.9 mg/cm²	Action Level
26	POS	WINDOW CASE	WOOD	D	GOOD	WHITE	DEN	FIRST			2.0 mg/cm²	Action Level
27	POS	WINDOW SASH	WOOD	D	GOOD	WHITE	DEN	FIRST			3.3 mg/cm²	Action Level
28	NEG	WALL	PANELING	D	GOOD	WHITE	DINE ROOM	FIRST			0.2 mg/cm²	Action Level
29	NEG	WALL	PANELING	C	GOOD	WHITE	DINE ROOM	FIRST			0.1 mg/cm²	Action Level
30	NEG	WALL	PANELING	C	GOOD	WHITE	DINE ROOM	FIRST			0.1 mg/cm²	Action Level
31	NEG	WALL	PANELING	B	GOOD	WHITE	DINE ROOM	FIRST			0.2 mg/cm²	Action Level
32	NEG	WALL	PANELING	A	GOOD	WHITE	DINE ROOM	FIRST			0.1 mg/cm²	Action Level
33	POS	BASEBOARD	WOOD	A	GOOD	WHITE	DINE ROOM	FIRST			2.2 mg/cm²	Action Level
34	NEG	BASEBOARD	WOOD	C	GOOD	WHITE	KITCHEN	FIRST			0.0 mg/cm²	Action Level
35	NEG	WINDOW SILL	WOOD	B	GOOD	WHITE	KITCHEN	FIRST			0.0 mg/cm²	Action Level
36	POS	WINDOW SASH	WOOD	B	GOOD	WHITE	KITCHEN	FIRST			3.5 mg/cm²	Action Level

Lead Paint Inspection Report

Inspection Date: 7/14/2022 - 7/14/2022
Action Level: 0.7 (mg/cm²)
Total Readings: 135
Unit Started: 07/14/2022 15:10:57
Unit Ended: 07/14/2022 16:52:46

Inspection Site: Mark Foster
7203 Cedar Ave
Takoma Park, MD 20912
Year Built: 1918

Read #	Result	COMPONENT	SUBSTRATE	SIDE	CONDITION	COLOR	ROOM TYPE	FLOOR	OTHER	MISC.	Lead (mg/cm²)	Mode
37	NEG	WINDOW CASE	WOOD	B	GOOD	WHITE	KITCHEN	FIRST			0.0 mg/cm²	Action Level
38	NEG	WINDOW CASE	WOOD	B	GOOD	WHITE	BATH	FIRST			0.1 mg/cm²	Action Level
39	POS	WINDOW SASH	WOOD	B	GOOD	WHITE	BATH	FIRST			11.5 mg/cm²	Action Level
40	NEG	WINDOW SILL	WOOD	B	GOOD	WHITE	BATH	FIRST			0.0 mg/cm²	Action Level
41	NEG	BASEBOARD	WOOD	B	GOOD	WHITE	BATH	FIRST			0.1 mg/cm²	Action Level
42	NEG	WALL	DRYWALL	B	GOOD	WHITE	BATH	FIRST			0.0 mg/cm²	Action Level
43	NEG	WALL	DRYWALL	C	GOOD	WHITE	BATH	FIRST			0.0 mg/cm²	Action Level
44	NEG	WALL	DRYWALL	D	GOOD	WHITE	BATH	FIRST			0.0 mg/cm²	Action Level
45	NEG	WALL	DRYWALL	A	GOOD	WHITE	BATH	FIRST			0.0 mg/cm²	Action Level
46	POS	DOOR JAMB	DRYWALL	D	GOOD	WHITE	BATH	FIRST			12.4 mg/cm²	Action Level
47	NEG	DOOR CASE	DRYWALL	D	GOOD	WHITE	BATH	FIRST			0.0 mg/cm²	Action Level
48	POS	DOOR	DRYWALL	D	GOOD	WHITE	BATH	FIRST			13.3 mg/cm²	Action Level
49	POS	DOOR	WOOD	A	GOOD	WHITE	BED 1	FIRST			21.7 mg/cm²	Action Level
50	POS	DOOR CASE	WOOD	A	GOOD	WHITE	BED 1	FIRST			10.6 mg/cm²	Action Level
51	POS	WINDOW SILL	WOOD	C	GOOD	WHITE	BED 1	FIRST			12.6 mg/cm²	Action Level
52	POS	WINDOW CASE	WOOD	C	GOOD	WHITE	BED 1	FIRST			10.5 mg/cm²	Action Level
53	POS	WINDOW SASH	WOOD	C	GOOD	WHITE	BED 1	FIRST			10.2 mg/cm²	Action 1Leve
54	POS	BASEBOARD	WOOD	C	GOOD	WHITE	BED 1	FIRST			12.3 mg/cm²	Action Level

Lead Paint Inspection Report

Inspection Date: 7/14/2022 - 7/14/2022
Action Level: 0.7 (mg/cm²)
Total Readings: 135
Unit Started: 07/14/2022 15:10:57
Unit Ended: 07/14/2022 16:52:46

Inspection Site: Mark Foster
7203 Cedar Ave
Takoma Park, MD 20912
Year Built: 1918

Read #	Result	COMPONENT	SUBSTRATE	SIDE	CONDITION	COLOR	ROOM TYPE	FLOOR	OTHER	MISC.	Lead (mg/cm²)	Mode
55	POS	DOOR	WOOD	A	GOOD	WHITE	BED 1	FIRST	CLOSET		17.5 mg/cm²	Action Level
56	NEG	WALL	WOOD	A	GOOD	WHITE	BED 1	FIRST	CLOSET		0.2 mg/cm²	Action Level
57	NEG	WALL	WOOD	B	GOOD	WHITE	BED 1	FIRST	CLOSET		0.0 mg/cm²	Action Level
58	NEG	WALL	WOOD	C	GOOD	WHITE	BED 1	FIRST	CLOSET		0.0 mg/cm²	Action Level
59	NEG	WALL	DRYWALL	C	GOOD	WHITE	BED 1	FIRST	CLOSET		0.4 mg/cm²	Action Level
60	NEG	WALL	DRYWALL	B	GOOD	WHITE	BED 1	FIRST	CLOSET		0.3 mg/cm²	Action Level
61	NEG	WALL	DRYWALL	D	GOOD	WHITE	BED 1	FIRST	CLOSET		0.4 mg/cm²	Action Level
62	NEG	WALL	DRYWALL	A	GOOD	WHITE	BED 1	FIRST	CLOSET		0.2 mg/cm²	Action Level
63	NEG	STRINGER	WOOD	A	GOOD	WHITE	STAIRS				0.3 mg/cm²	Action Level
64	NEG	WALL	WOOD	A	GOOD	WHITE	BED 3	SECOND			0.0 mg/cm²	Action Level
65	NEG	WALL	WOOD	C	GOOD	WHITE	BED 3	SECOND			0.0 mg/cm²	Action Level
66	NEG	WALL	WOOD	C	GOOD	WHITE	BED 3	SECOND			0.0 mg/cm²	Action Level
67	NEG	WINDOW SILL	WOOD	C	GOOD	WHITE	BED 3	SECOND			0.0 mg/cm²	Action Level
68	NEG	WINDOW SASH	WOOD	C	GOOD	WHITE	BED 3	SECOND			0.2 mg/cm²	Action Level
69	NEG	WINDOW SASH	WOOD	C	GOOD	WHITE	BED 3	SECOND			0.0 mg/cm²	Action Level
70	POS	WINDOW WELL	WOOD	D	GOOD	WHITE	BED 3	SECOND			19.2 mg/cm²	Action Level
71	POS	DOOR JAMB	WOOD	D	GOOD	WHITE	BED 3	SECOND			18.1 mg/cm²	Action Level
72	NEG	WINDOW SASH	WOOD	D	GOOD	WHITE	BED 3	SECOND			0.2 mg/cm²	Action Level

Lead Paint Inspection Report

Inspection Date: 7/14/2022 - 7/14/2022
Action Level: 0.7 (mg/cm²)
Total Readings: 135
Unit Started: 07/14/2022 15:10:57
Unit Ended: 07/14/2022 16:52:46

Inspection Site: Mark Foster
7203 Cedar Ave
Takoma Park, MD 20912
Year Built: 1918

Read #	Result	COMPONENT	SUBSTRATE	SIDE	CONDITION	COLOR	ROOM TYPE	FLOOR	OTHER	MISC.	Lead (mg/cm²)	Mode
73	POS	WINDOW SASH	WOOD	B	GOOD	WHITE	BED 2	SECOND			14.9 mg/cm²	Action Level
74	POS	WINDOW WELL	WOOD	B	GOOD	WHITE	BED 2	SECOND			30.0 mg/cm²	Action Level
75	NEG	WINDOW CASE	WOOD	B	GOOD	WHITE	BED 2	SECOND			0.0 mg/cm²	Action Level
76	NEG	DOOR	WOOD	A	GOOD	WHITE	BED 2	SECOND			0.0 mg/cm²	Action Level
77	NEG	CROWN MOLDING	WOOD	A	GOOD	WHITE	BED 2	SECOND			0.0 mg/cm²	Action Level
78	NEG	CROWN MOLDING	WOOD	A	GOOD	WHITE	BED 2	SECOND			0.0 mg/cm²	Action Level
79	NEG	WINDOW SILL	WOOD	D	GOOD	WHITE	BED 4	SECOND			0.2 mg/cm²	Action Level
80	NEG	WINDOW CASE	WOOD	D	GOOD	WHITE	BED 4	SECOND			0.2 mg/cm²	Action Level
81	NEG	WINDOW SASH	WOOD	D	GOOD	WHITE	BED 4	SECOND			0.4 mg/cm²	Action Level
82	NEG	BASEBOARD	WOOD	D	GOOD	WHITE	BED 4	SECOND			0.1 mg/cm²	Action Level
83	NEG	WALL	DRYWALL	D	GOOD	WHITE	BED 4	SECOND			0.3 mg/cm²	Action Level
84	NEG	DOOR	WOOD	B	GOOD	WHITE	BED 4	SECOND			0.2 mg/cm²	Action Level
85	NEG	DOOR	WOOD	C	GOOD	WHITE	BED 4	SECOND			0.1 mg/cm²	Action Level
86	POS	WALL	DRYWALL	B	GOOD	WHITE	BED 4	SECOND	CLOSET		8.2 mg/cm²	Action Level
87	POS	WALL	DRYWALL	C	GOOD	WHITE	BED 4	SECOND	CLOSET		6.1 mg/cm²	Action Level
88	POS	WALL	DRYWALL	D	GOOD	WHITE	BED 4	SECOND	CLOSET		8.5 mg/cm²	Action Level
89	NEG	WALL	WOOD	D	FAIR	WHITE	BED 5	SECOND	CLOSET		0.0 mg/cm²	Action Level
90	NEG	WALL	WOOD	D	FAIR	WHITE	BED 5	SECOND	CLOSET		0.1 mg/cm²	Action Level

Lead Paint Inspection Report

Inspection Date: 7/14/2022 - 7/14/2022
Action Level: 0.7 (mg/cm²)
Total Readings: 135
Unit Started: 07/14/2022 15:10:57
Unit Ended: 07/14/2022 16:52:46

Inspection Site: Mark Foster
7203 Cedar Ave
Takoma Park, MD 20912
Year Built: 1918

Read #	Result	COMPONENT	SUBSTRATE	SIDE	CONDITION	COLOR	ROOM TYPE	FLOOR	OTHER	MISC.	Lead (mg/cm²)	Mode
91	POS	WALL	WOOD	D	FAIR	WHITE	BED 5	SECOND	CLOSET		1.4 mg/cm²	Action Level
92	POS	WINDOW JAMB	WOOD	A	FAIR	WHITE	BED 5	SECOND	CLOSET		15.4 mg/cm²	Action Level
93	POS	WINDOW WELL	WOOD	A	FAIR	WHITE	BED 5	SECOND	CLOSET		16.6 mg/cm²	Action Level
94	NEG	WINDOW SASH	WOOD	A	FAIR	WHITE	BED 5	SECOND	CLOSET		0.5 mg/cm²	Action Level
95	NEG	WINDOW SILL	WOOD	A	FAIR	WHITE	BED 5	SECOND	CLOSET		0.1 mg/cm²	Action Level
96	NEG	WALL	DRYWALL	A	FAIR	GREEN	BED 5	SECOND	CLOSET		0.2 mg/cm²	Action Level
97	POS	WALL	DRYWALL	CEILING	FAIR	WHITE	BED 5	SECOND	CLOSET		6.9 mg/cm²	Action Level
98	NEG	WALL	DRYWALL	A	GOOD	WHITE	BED 5	SECOND			0.3 mg/cm²	Action Level
99	NEG	WINDOW SILL	WOOD	A	GOOD	WHITE	BED 5	SECOND			0.1 mg/cm²	Action Level
100	NEG	WINDOW SASH	WOOD	A	GOOD	WHITE	BED 5	SECOND			0.3 mg/cm²	Action Level
101	NEG	WINDOW CASE	WOOD	A	GOOD	WHITE	BED 5	SECOND			0.1 mg/cm²	Action Level
102	NEG	WINDOW CASE	WOOD	B	GOOD	WHITE	BED 5	SECOND			0.2 mg/cm²	Action Level
103	NEG	DOOR	WOOD	C	GOOD	WHITE	BED 5	SECOND			0.2 mg/cm²	Action Level
104	NEG	RAD COVER	WOOD	D	GOOD	WHITE	BATH	SECOND			0.0 mg/cm²	Action Level
105	NEG	RAD COVER	WOOD	D	GOOD	WHITE	BATH	SECOND			0.0 mg/cm²	Action Level
106	POS	WINDOW SASH	WOOD	B	GOOD	WHITE	BATH	SECOND			10.6 mg/cm²	Action Level
107	NEG	WINDOW SILL	WOOD	B	GOOD	WHITE	BATH	SECOND			0.1 mg/cm²	Action Level
108	NEG	WINDOW CASE	WOOD	B	GOOD	WHITE	BATH	SECOND			0.1 mg/cm²	Action Level

Lead Paint Inspection Report

Inspection Date: 7/14/2022 - 7/14/2022
Action Level: 0.7 (mg/cm²)
Total Readings: 135
Unit Started: 07/14/2022 15:10:57
Unit Ended: 07/14/2022 16:52:46

Inspection Site: Mark Foster
7203 Cedar Ave
Takoma Park, MD 20912
Year Built: 1918

Read #	Result	COMPONENT	SUBSTRATE	SIDE	CONDITION	COLOR	ROOM TYPE	FLOOR	OTHER	MISC.	Lead (mg/cm²)	Mode
109	NEG	DOOR	WOOD	D	GOOD	WHITE	BATH	SECOND			0.0 mg/cm²	Action Level
110	NEG	DOOR JAMB	WOOD	D	GOOD	WHITE	BATH	SECOND			0.1 mg/cm²	Action Level
111	NEG	WALL	CONCRETE	D	GOOD	WHITE	BASEMENT	BSMT	STORAGE		0.4 mg/cm²	Action Level
112	NEG	WALL	CONCRETE	A	GOOD	WHITE	BASEMENT	BSMT	STORAGE		0.3 mg/cm²	Action Level
113	NEG	WALL	CONCRETE	FLOOR	GOOD	GREY	BASEMENT	BSMT	STORAGE		0.5 mg/cm²	Action Level
114	NEG	WALL	CONCRETE	FLOOR	GOOD	GREY	BASEMENT	BSMT	STORAGE		0.6 mg/cm²	Action Level
115	NEG	WALL	CONCRETE	FLOOR	GOOD	GREY	BASEMENT	BSMT	STORAGE		0.6 mg/cm²	Action Level
116	POS	STAIR TREAD	WOOD	FLOOR	FAIR	GREY	BASEMENT	BSMT			0.8 mg/cm²	Action Level
117	POS	STAIR TREAD	WOOD	FLOOR	FAIR	GREY	BASEMENT	BSMT			7.5 mg/cm²	Action Level
118	NEG	SUP. COLUMN	WOOD		FAIR	WHITE	BASEMENT	BSMT			0.0 mg/cm²	Action Level
119	NEG	SUP. COLUMN	METAL		FAIR	GREY	BASEMENT	BSMT			0.1 mg/cm²	Action Level
120	NEG	WALL	CONCRETE	A	POOR	YELLOW	EXTERIOR			stucco	0.3 mg/cm²	Action Level
121	NEG	WALL	CONCRETE	A	POOR	YELLOW	EXTERIOR			stucco	0.2 mg/cm²	Action Level
122	POS	WINDOW CASE	WOOD	A	FAIR	ORANGE	EXTERIOR			stucco	22.1 mg/cm²	Action Level
123	POS	WINDOW SILL	WOOD	A	FAIR	ORANGE	EXTERIOR			stucco	9.2 mg/cm²	Action Level
124	POS	WALL	WOOD	A	FAIR	YELLOW	EXTERIOR				0.7 mg/cm²	Action Level
125	POS	WALL	WOOD	A	FAIR	YELLOW	EXTERIOR				2.2 mg/cm²	Action Level
126	POS	TRIM	WOOD	B	FAIR	ORANGE	EXTERIOR				2.0 mg/cm²	Action Level

Lead Paint Inspection Report

Inspection Date: 7/14/2022 - 7/14/2022
Action Level: 0.7 (mg/cm²)
Total Readings: 135
Unit Started: 07/14/2022 15:10:57
Unit Ended: 07/14/2022 16:52:46

Inspection Site: Mark Foster
7203 Cedar Ave
Takoma Park, MD 20912
Year Built: 1918

Read #	Result	COMPONENT	SUBSTRATE	SIDE	CONDITION	COLOR	ROOM TYPE	FLOOR	OTHER	MISC.	Lead (mg/cm²)	Mode
127	NEG	CEILING JOIST	METAL	C	FAIR	ORANGE	EXTERIOR			deck framr	0.1 mg/cm²	Action Level
128	NEG	CEILING JOIST	METAL	C	FAIR	ORANGE	EXTERIOR			deck framr	0.1 mg/cm²	Action Level
129	NEG	WALL	CONCRETE	C	FAIR	ORANGE	EXTERIOR			deck framr	0.3 mg/cm²	Action Level
130	NEG			CALI							0.9 mg/cm²	Action Level
131	POS			CALI							0.9 mg/cm²	Action Level
132	POS			CALI							1.0 mg/cm²	Action Level
133	NEG			CALI							0.0 mg/cm²	Action Level
134	NEG			CALI							0.0 mg/cm²	Action Level
135	NEG			CALI							0.0 mg/cm²	Action Level

------ END OF READINGS ------

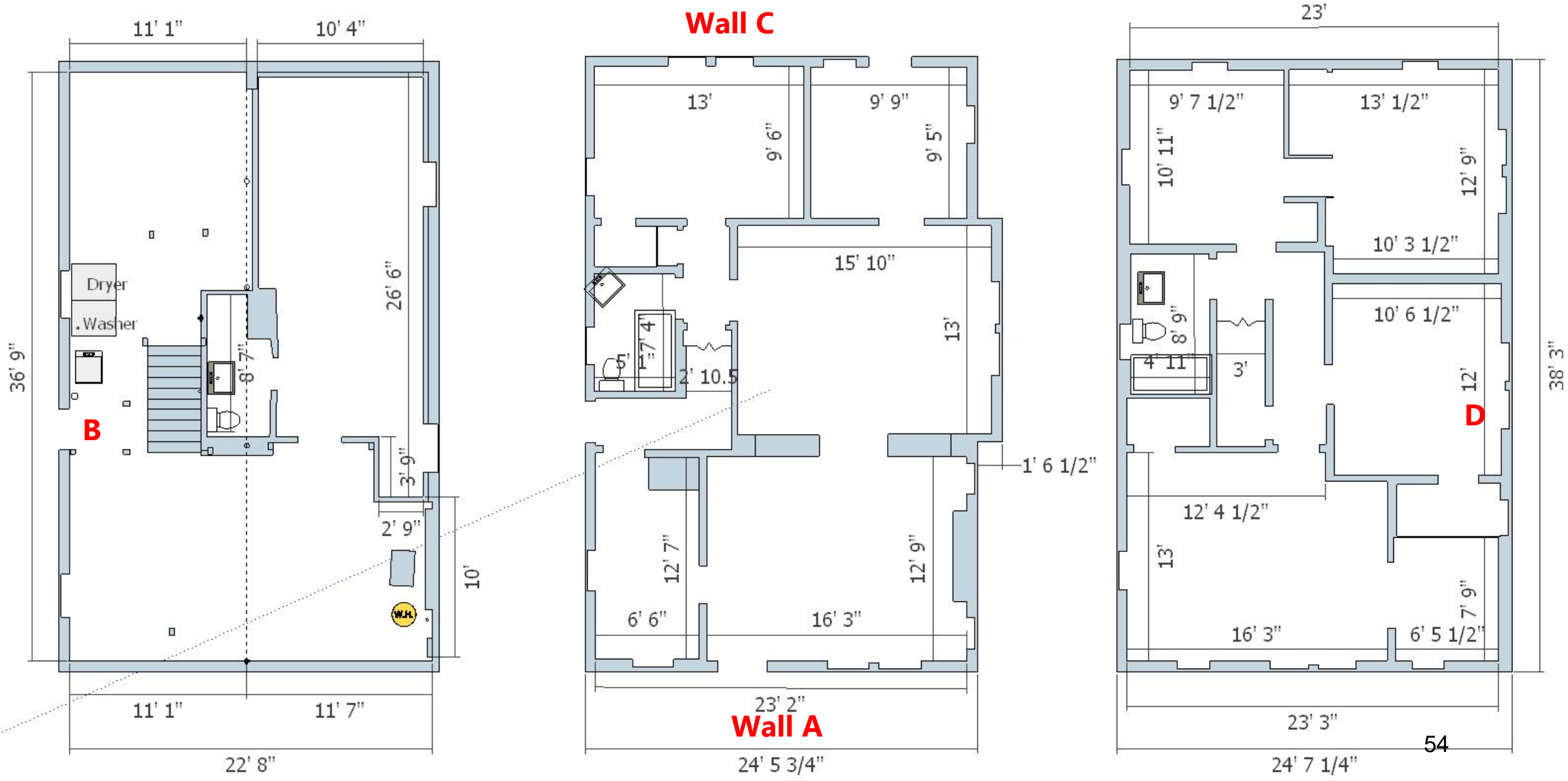
11' 1"
10' 4"
Dryer
Washer
36' 9"
26' 6"
8' 7"
B
3' 9"
2' 9"
10'
W.H.
11' 1"
11' 7"
22' 8"
Wall C
13'
9' 9"
9' 6"
9' 5"
15' 10"
13'
5'
7' 4"
2' 10.5
1' 6 1/2"
12' 7"
12' 9"
6' 6"
16' 3"
23' 2"
Wall A
24' 5 3/4"
23'
9' 7 1/2"
13' 1/2"
10' 11"
12' 9"
10' 3 1/2"
10' 6 1/2"
8' 9"
4' 11"
3'
12'
D
38' 3"
12' 4 1/2"
13'
7' 9"
16' 3"
6' 5 1/2"
23' 3"
24' 7 1/4"

THIS IS TO CERTIFY THAT

Ronald Odell Childs, Jr.

HAS MET THE LEAD PAINT SERVICES ACCREDITATION REQUIREMENTS FOR

Risk Assessor

EXPIRATION DATE: 03/24/2024

TRAINING PROVIDER: Aerosol Monitoring & Analysis, Inc.

COURSE DATE: 07/28/2020

Certificate # 17573

ADMINISTRATOR, LEAD PAINT ACCREDITATION
MARYLAND DEPARTMENT OF THE ENVIRONMENT

03/24/2022
Date

STATE OF MARYLAND

Transcend Double Hung Sash Kits

If you are looking to upgrade your old, inefficient double hung windows, but the frames are still in good condition, here's the smartest, least expensive, most convenient way to replace them. Sierra Pacific easy-tilt replacement sash kits are sized to fit your existing sash opening and are easy to install. It's all accomplished from the inside of your home, without removing your existing frame, sill, interior or exterior trim.

Standard Construction:

- Constructed from heavy duty .055 extruded aluminum exterior, with a warm wood interior. Also available in an all wood exterior and interior finish.
- Concealed block-and-tackle balances.
- Adjustable jambliner for superior installation and smoother operation.
- Matching full or half screen option.
- Available in 50/50, 40/60, or 60/40 sash splits.

MINIMUM / MAXIMUM FRAME SIZES	
Actual unit sizes based on existing sash opening (S.O.) measurements.	
CLAD DOUBLE HUNG SASH KIT	
Minimum S.O. Width	20"
Minimum S.O. Height	34"
Maximum S.O. Width	44"
Maximum S.O. Height	78"

How to Measure:

• Note: when measuring the height of the frame, open the bottom sash so the meeting rails clear each other ***Figure 1***, this will allow your measuring tape to slide between the sash.
OR
Remove each sash from the opening and then measure.

• Measure existing sash opening at three locations:
Left, Center, Right for *Height* measurements ***Figure 1***
AND
Top, Middle, Bottom for *Width* measurements ***Figure 2***.
Please Note: Width and Height measurements as shown in ***Figures 1 & 2***, must be taken from the inside of wood frame to the inside of wood frame.

• Record the measurements.

• Use the smallest of three width and height sizes recorded for ordering.

Figure 1 **Shows measuring the *Height* of the frame**

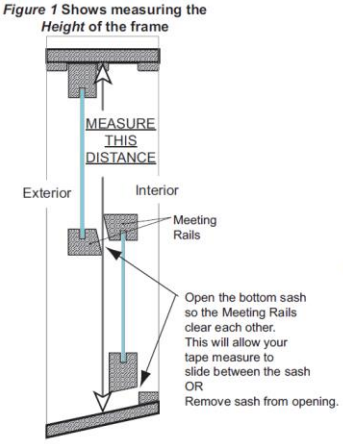

Figure 2
Shows measuring the *Width* of the frame

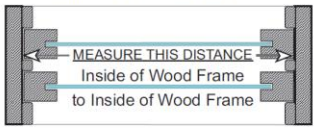

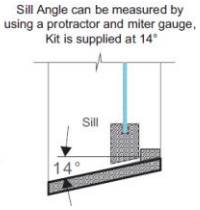

Thermal Performance (NFRC):

Air Filled			Argon Filled		
Low-E 272 Clear	**Low-E 366**	**Low-E 180/i89**	**Low-E 272 Clear**	**Low-E 366**	**Low-E 180/i89**
U-FACTOR.....0.33	U-FACTOR.....0.33	U-FACTOR.....0.29	U-FACTOR.....0.30	U-FACTOR.....0.30	U-FACTOR.....0.27
SHGC.....0.20	SHGC.....0.20	SHGC.....0.44	SHGC.....0.30	SHGC.....0.20	SHGC.....0.45
VT.....0.46	VT.....0.46	VT.....0.55	VT.....0.51	VT.....0.46	VT.....0.55
CR.....55	CR.....55	CR.....43	CR.....58	CR.....59	CR.....46

All values represent insulated glass in the Transcend Clad Double Hung Sash Kits using standard black warm edge spacer. Additional glazing options available.

For a comprehensive list of glazing configurations, please refer to the Transcend Double Hung Sash Kit Product Performance Guide (NFRC) located in the Technical Resources Library on our website.

Transcend Clad Double Hung Sash Kit

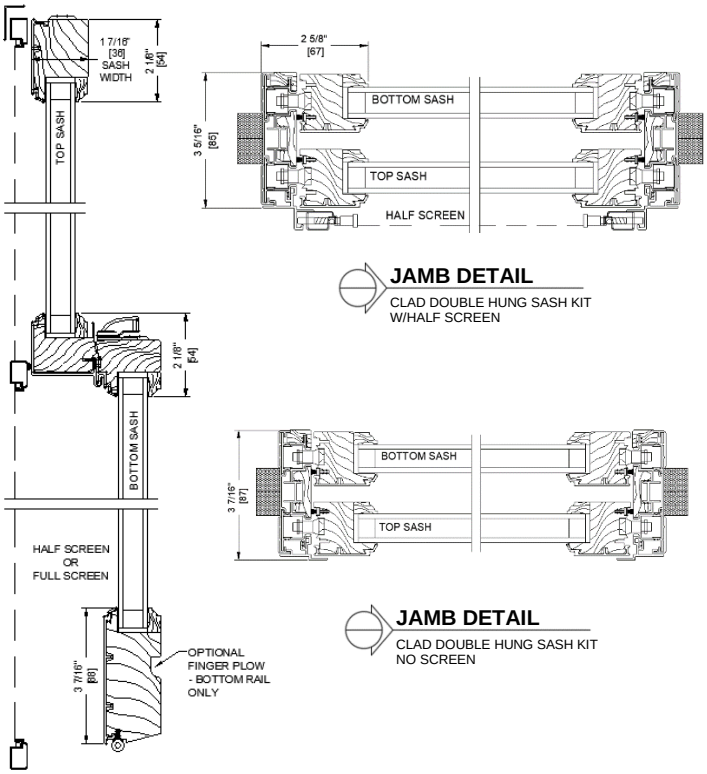

Transcend Wood Double Hung Sash Kit

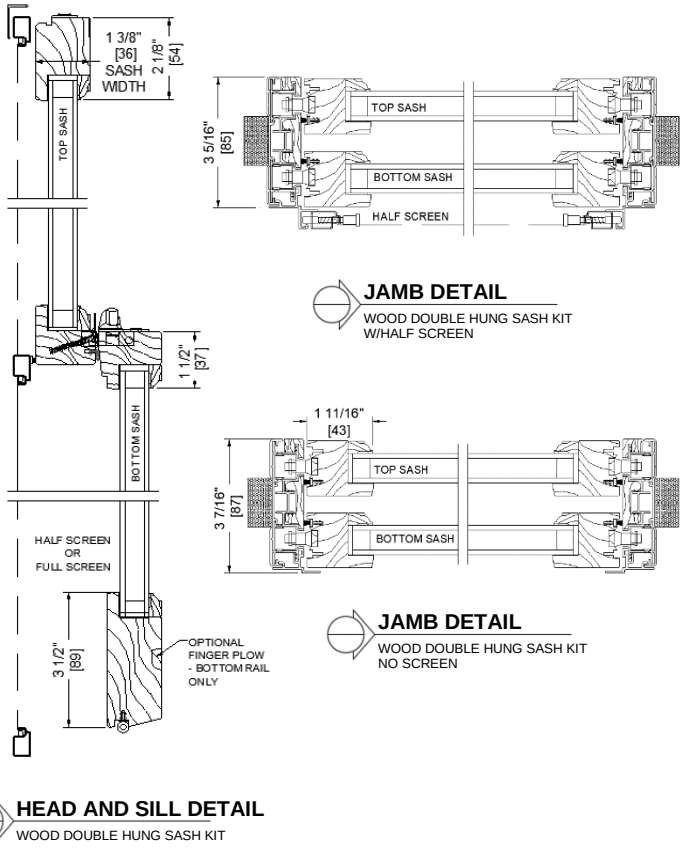

Additional product details may be found on our website www.sierrapacificwindows.com/ProfessionalResources/TechnicalLibrary

Sash Kit Contents

- Upper & Lower Sash
- Complete Left-Hand & Right-Hand Concealed Jambliner and Clip Assembly
- (4) Head & Sill Gaskets
- Head Parting Stop w/#6 x 1" Screws
- #8 x 1-1/2" Jambliner Installation Screws
- Installation Instruction

Double Hung Sash Kit Additional Features

- Color Palette of 75 colors in powder coated AAMA 2604, optional AAMA 2605.
- Extensive offering of performance glass available in black warm edge or Cardinal spacer for optimum efficiency.
- Grille options including Simulated Divided Lites and Grilles-Between-Glass.
- Factory finished Ultra Coat Paint or Ultra Stain interior.

Place Business Card or Company Information Here

Please visit our website **www.sierrapacificwindows.com** for additional details or to contact your nearest Sierra Pacific Branch or Dealer location.

VS/~~S~~/~~E~~ Venting Skylight
Technical Product Data Sheet

Description

- VS/VSS/VSE are Venting Deck Mount Skylights that mounts to the roof deck. Venting skylight, provided with various glazings, is manufactured with a white maintenance-free finish (or optional stain grade for VS/VSS) pine frame/sash and a neutral gray aluminum profile (optional copper for VS/VSE) with an insulated glass unit.

Installation

- Designated top, bottom, and sides for installation in one direction.
- Single unit applications or combination flashing for multiple skylight applications.
- 14 degrees to 85 degrees, use standard installation procedure.
- VS includes operating hook. Control rod (ZCT 300) and crank handle (ZZZ 212) available.
- VSS includes external acoustic rain sensor/solar panel and remote.
- VSE includes 20 feet of cord, internal rain sensor and remote.

Flashings

- EDL - Engineered neutral gray flashing for single installation with thin roofing material (½" max) for roof pitches from 14-85 degrees.
- EDW – Engineered neutral gray flashing for single installation with tile (over ¾") roofing material for roof pitches from 14-85 degrees.
- EDM – Engineered neutral gray flashing for single installation with metal roof (1½"-1¾" max profile) for roof pitches from 14-85 degrees.
- EKL- Engineered neutral gray flashing for multiple skylights with thin roofing material (Max. 5/16") on roof pitches from 14 to 85 degrees.
- EKW – Engineered neutral gray flashing for multiple skylights with high profile roofing material (Max. 3½") on roof pitches from 15 to 85 degrees.
- Applications less than 14-degree roof pitch - flashing provided by others.

Interior Accessories

- FSCH - Solar powered Room darkening - double pleated shade.
- FSLH - Solar powered Light filtering - single pleated shade.

Type Sign

- Example: VSS C01 0004E 01BM05
- Located on top of interior frame cover.

Standard Sizes

- C01, C04, C06, C08, M02, M04, M06, M08, S01, S06
- No custom sizes available.

Warranty

- **Installation** – 10 years from the date of purchase; VELUX No Leak Warranty warrants skylight installation. Must be installed with VELUX flashings and included adhesive underlayment.
- **Skylight** – 10 years from the date of purchase; VELUX warrants that the skylight will be free from defects in material and workmanship.
- **Glass Seal** – 20 years from the date of purchase; VELUX warrants that the insulated glass pane will not develop a material obstruction of vision due to failure of the glass seal.
- **Hail Warranty** – 10 years from the date of purchase; VELUX warrants only laminated glass panes against hail breakage.
- **Accessories and Electrical Components** – 5 years from the date of purchase; VELUX warrants Velux shades and control systems will be free from defects in material and workmanship.

Cross Section

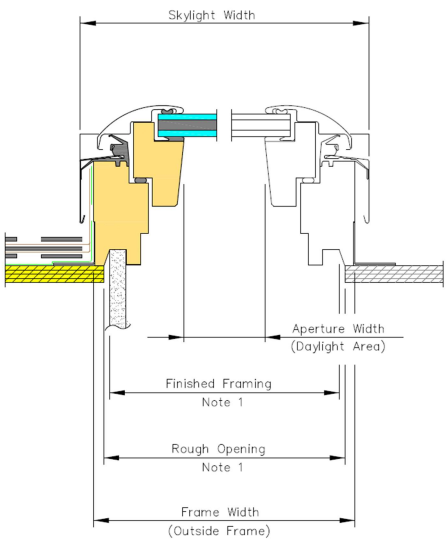

Size	Rough Opening Width	Frame Width	Frame Aperture Width	Skylight Width	Rough Opening Height	Frame Height	Frame Aperture Height	Skylight Height	Daylight Area (Sq. Feet)
C01	21	21 ½	16	22 5/16	26 7/8	27 3/8	20 7/16	28 3/8	2.27
C04	21	21 ½	16	22 5/16	37 7/8	38 3/8	31 7/16	39 3/8	3.50
C06	21	21 ½	16	22 5/16	45 ¾	46 ¼	39 5/16	47 ¼	4.38
C08	21	21 ½	16	22 5/16	54 7/16	54 5/16	48	55 5/16	5.34
M02	30 1/16	30 9/16	25	31 3/8	30	30 ½	23 9/16	30	4.11
M04	30 1/16	30 9/16	25	31 3/8	37 7/8	38 3/8	31 7/16	39 3/8	5.48
M06	30 1/16	30 9/16	25	31 3/8	45 ¾	46 ¼	39 5/16	47 ¼	6.86
M08	30 1/16	30 9/16	25	31 3/8	54 7/16	54 5/16	48	55 5/16	8.36
S01	44 ¼	44 ¾	39 ¼	45 9/16	26 7/8	27 3/8	20 7/16	28 3/8	5.57
S06	44 ¼	44 ¾	39 ¼	45 9/16	45 ¾	46 ¼	39 5/16	47 ¼	10.73

Glazings and Certification

Glazing	NFRC U-factor	NFRC SHGC	NFRC Vt	Hallmark 426-H-670	IAPMO-ES ER 199	Fla Prod Approval 13309	HVHZ	TDI
04 Laminated -2.3 mm laminated (0.76 mm interlayer) with tempered Low E366 outer pane.	0.43	0.23	0.53	√	√	√		SK-03
06 Impact – 2.3 mm laminated (2.28 mm interlayer) with tempered Low E366 outer pane for hurricane areas	0.41	0.23	0.53	√	√	√	√	SK-14
08 White laminated -2.3 mm Laminated (0.76mm white interlayer) with tempered Low E366 outer pane.	0.43	0.22	0.38	√	√	√		SK-03
10 Snowload- 3 mm laminated (0.76 mm interlayer) with tempered Low E366 outer pane.	0.42	0.23	0.53	√				

Consult with Customer Service for special glazing options.

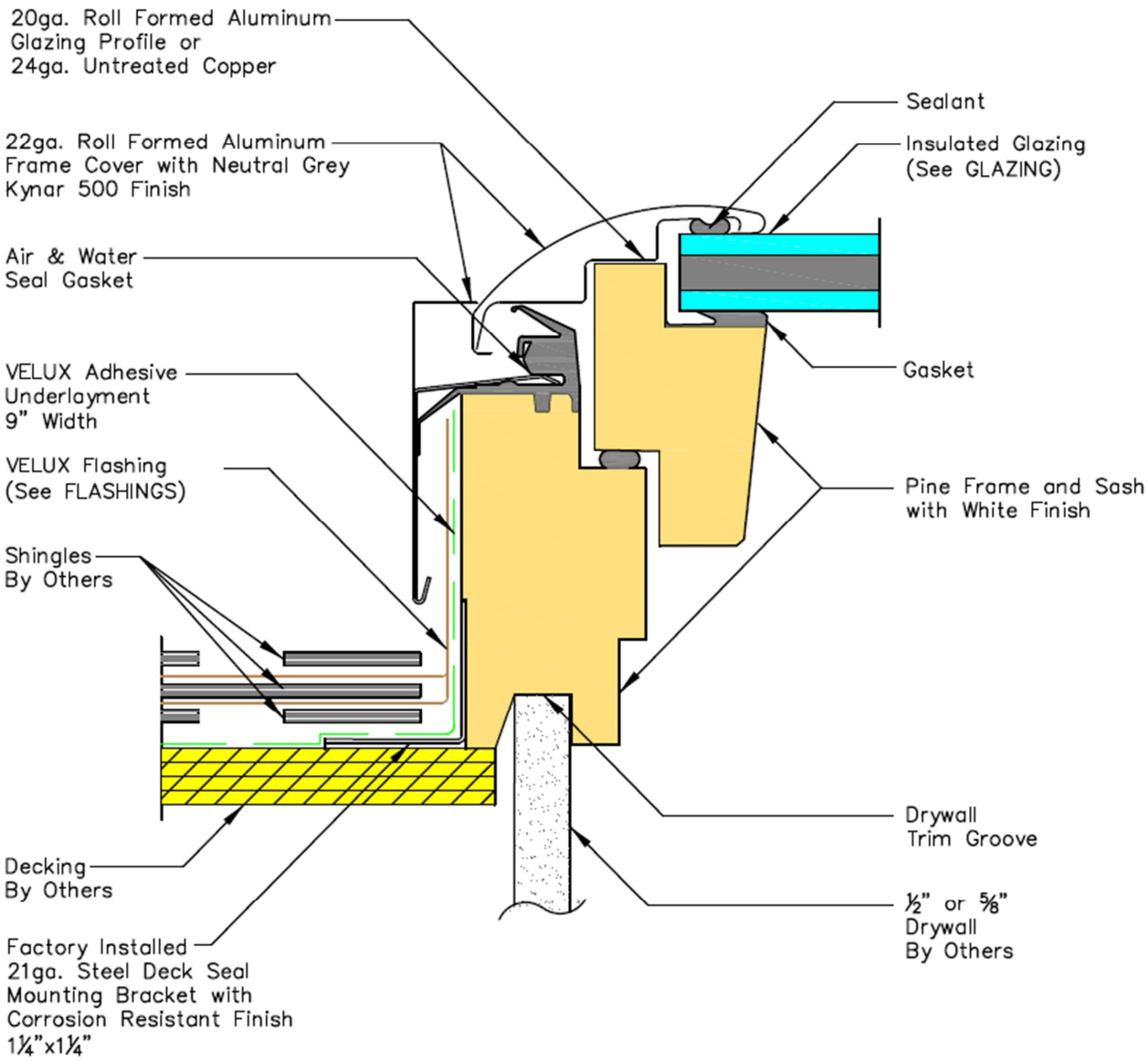

Corner keys made of ASA Luran in neutral grey finish.

3 Side Elevation
1/4" = 1'-0"

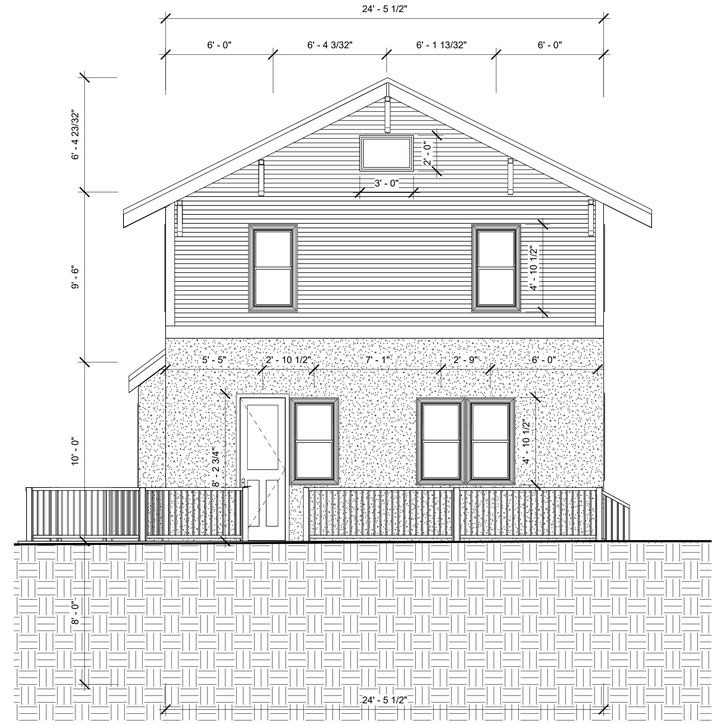

4 Rear Elevation
1/4" = 1'-0"

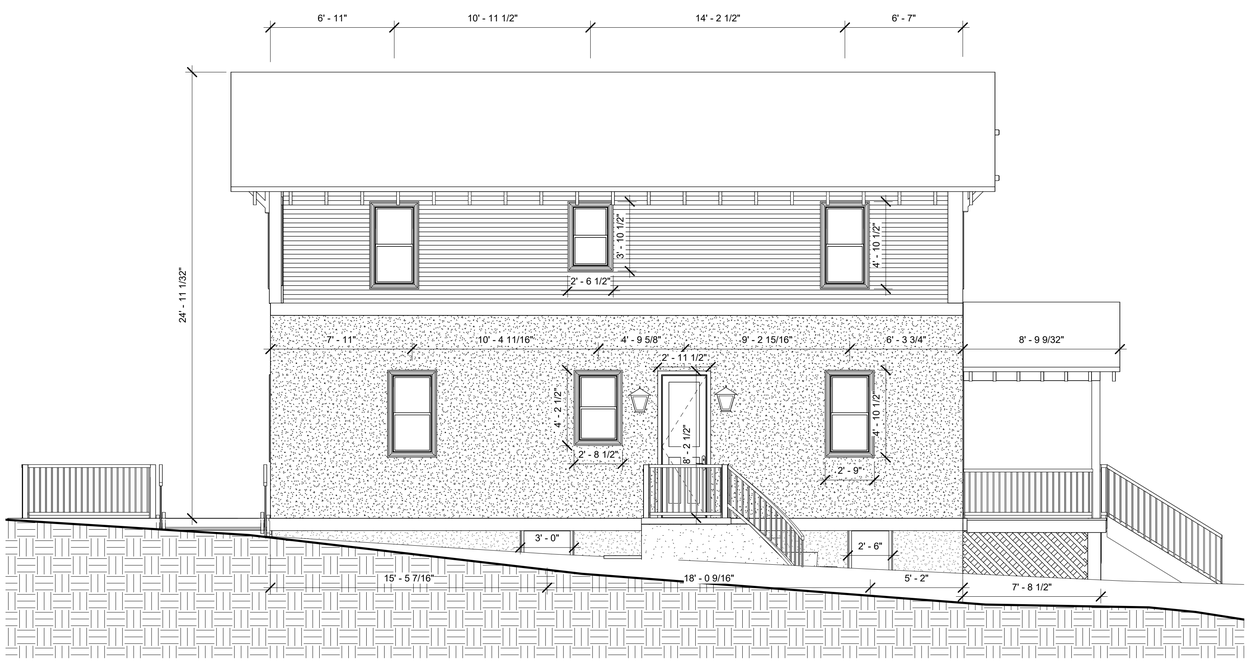

2 Drive Elevation
1/4" = 1'-0"

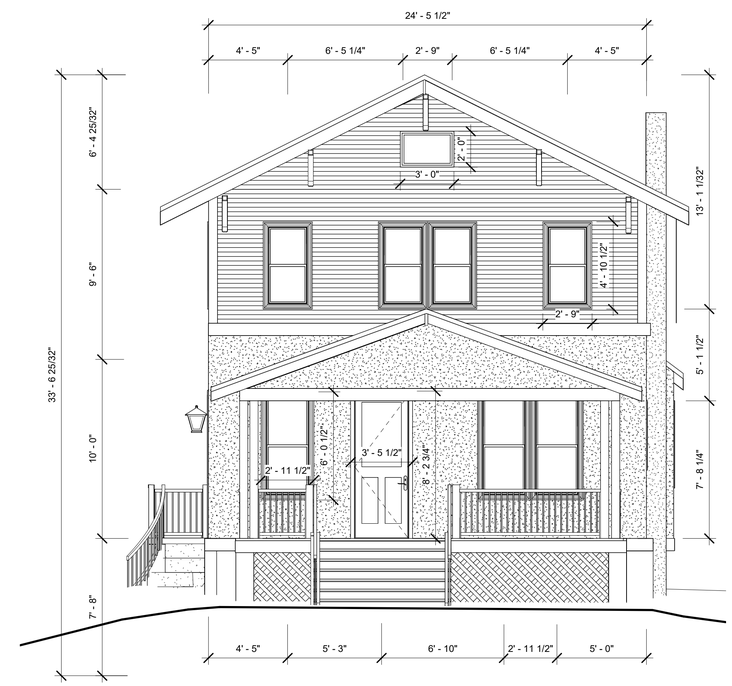

1 Front Elevation
1/4" = 1'-0"

DAWN HERSHBERGER
DESIGN
410-905-2832

RENOVATION OF RESIDENCE OF

KATYA & MARK FOSTER
7203 CEDAR LANE
TAKOMA PARK, MD 20912

AS BUILT

AB001

Scale: 1/4" = 1'-0"
Date: 07/10/22

24 x 36

NOTE: ONLY NEW/MODIFIED ELEMENTS ARE ANNOTATED IN THIS SET OF DRAWINGS

3 Side Elevation
1/4" = 1'-0"

4 Rear Elevation
1/4" = 1'-0"

2 Drive Elevation
1/4" = 1'-0"

1 Front Elevation
1/4" = 1'-0"

DAWN HERSHBERGER
DESIGN
410-905-2832

RENOVATION OF RESIDENCE OF

KATYA & MARK FOSTER
7203 CEDAR LANE
TAKOMA PARK, MD 20912

PROPOSED

A001

Scale: 1/4" = 1'-0"
Date: 07/10/22

24 x 36